Refrigerator

User manual

RS6*N**

SEUK Free Standing Appliance

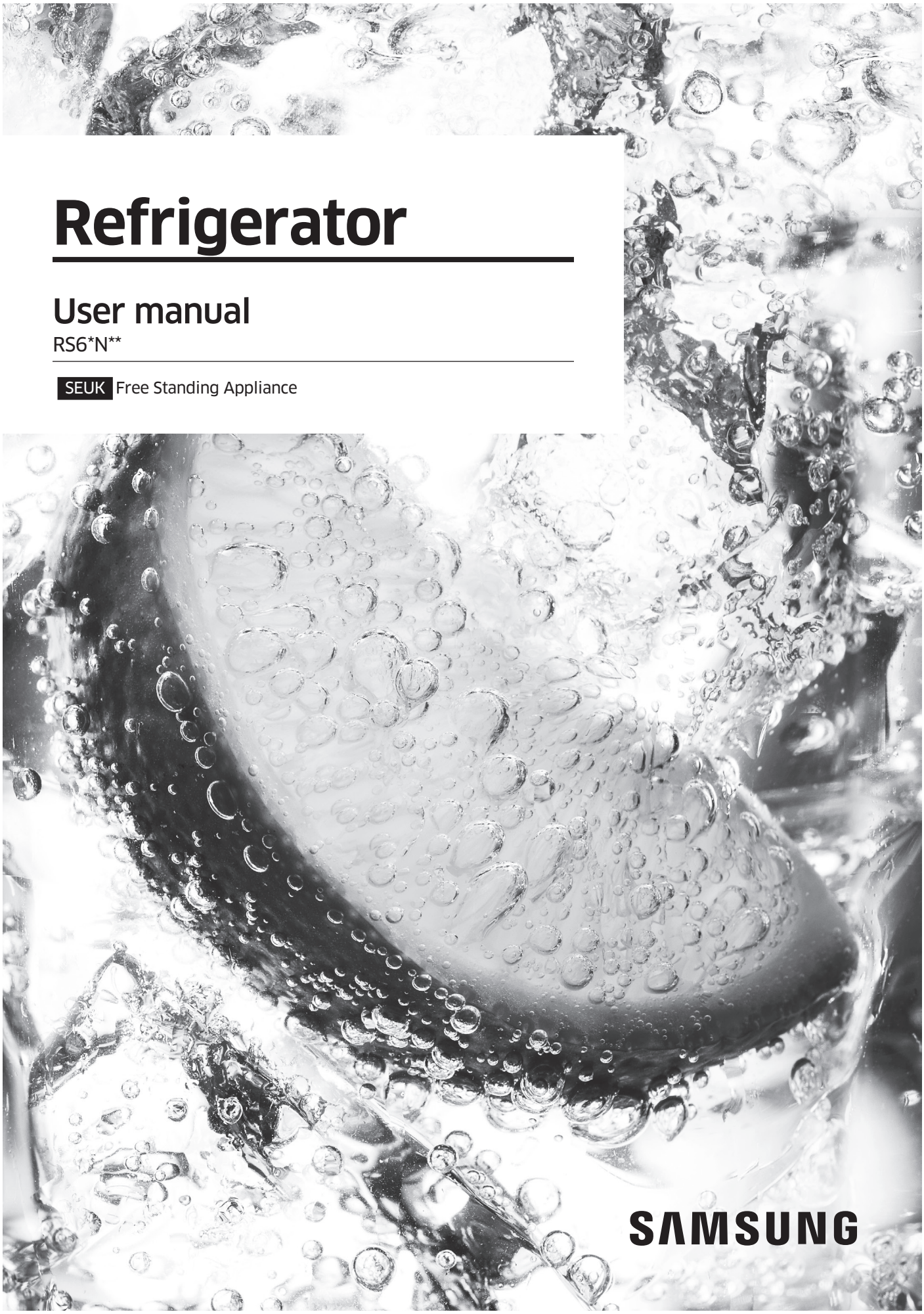

Untitled-2 1 2018-03-20 7:13:42

Contents

Safety information 3

Important safety symbols and precautions: 5
Severe warning signs for transportation and site 6
Critical installation warnings 7
Installation cautions 10
Critical usage warnings 11
Usage cautions 16
Cleaning cautions 19
Critical disposal warnings 21
Additional tips for proper usage 22
Saving Energy Tips 23
This appliance is intended to be used in household and similar applications such as 23
Instructions about the WEEE 24

Installation 25

Refrigerator at a glance 25
Step-by-step installation 27
Door removal for entrance 42

Operations 47

Feature panel 47
SmartThings (available only with the optional adapter) 52
Dispenser panel (applicable models only) 54
Special features 55

Maintenance 62

Handle and care 62
Cleaning 64
Replacement 65

Troubleshooting 66

General 66
Do you hear abnormal sounds from the refrigerator? 70
SmartThings 72

Untitled-2 2 2018-03-20 7:13:42

Safety information

- Before using your new Samsung Refrigerator, please read this manual thoroughly to ensure that you know how to operate the features and functions that your new appliance offers safely and efficiently.
- This appliance is not intended for use by persons (including children) with reduced physical, sensory, or mental capabilities, or those who lack experience and knowledge, unless they have been given supervision or instruction concerning the use of the appliance by a person responsible for their safety.
- This appliance can be used by children aged from 8 years and above and persons with reduced physical, sensory or mental capabilities or lack of experience and knowledge if they have been given supervision or instruction concerning use of the appliance in a safe way and understand the hazards involved.
  Children shall not play with the appliance. Cleaning and user maintenance shall not be made by children without supervision.
- Warnings and Important Safety Instructions in this manual do not cover all possible conditions and situations that may occur.
  It is your responsibility to use common sense, caution, and care when installing, maintaining, and operating your appliance.
- Because these following operating instructions cover various models, the characteristics of your refrigerator may differ slightly from those described in this manual and not all warning signs may be applicable. If you have any questions or concerns, contact your nearest service center or find help and information online at www.samsung.com.
- R-600a or R-134a is used as a refrigerant. Check the compressor label on the rear of the appliance or the rating label inside the fridge to see which refrigerant is used for your refrigerator. When this product contains flammable gas (Refrigerant R-600a), contact your local authority in regard to safe disposal of this product.

Untitled-2 3 2018-03-20 7:13:42

Safety information

- In order to avoid the creation of a flammable gas-air mixture if a leak in the refrigerating circuit occurs, the size of the room in which the appliance may be sited depends on the amount of refrigerant used.
- Never start up an appliance showing any signs of damage. If in doubt, consult your dealer. The room must be 1 m^3 in size for every 8 g of R-600a refrigerant inside the appliance.
  The amount of refrigerant in your particular appliance is shown on the identification plate inside the appliance.
- Refrigerant squirting out of the pipes could ignite or cause an eye injury. When refrigerant leaks from the pipe, avoid any naked flames and move anything flammable away from the product and ventilate the room immediately.
  - Failing to do so may result in fire or explosion.

Warning; Risk of fire / flammable materials

Untitled-2 4 2018-03-20 7:13:43

Important safety symbols and precautions:

Please follow all safety instructions in this manual. This manual uses the following safety symbols.

⚠ WARNING

Hazards or unsafe practices that may result in **severe personal injury, property damage, and/or death**.

⚠ CAUTION

Hazards or unsafe practices that may result in **severe personal injury and/or property damage**.

NOTE

Useful information that helps users understand or benefit from the refrigerator.

These warning signs are here to prevent injury to you and others.

Please follow them carefully.

After reading this section, keep it in a safe place for future reference.

Untitled-2 5 2018-03-20 7:13:43

Safety information

Severe warning signs for transportation and site

⚠ WARNING

- When transporting and installing the appliance, care should be taken to ensure that no parts of the refrigerating circuit are damaged.
  - Refrigerant leaking from the pipe work could ignite or cause an eye injury. If a leak is detected, avoid any naked flames or potential sources of ignition and air the room in which the appliance is standing for several minutes.
  - This appliance contains a small amount of isobutane refrigerant (R-600a), a natural gas with high environmental compatibility that is, however, also combustible. When transporting and installing the appliance, care should be taken to ensure that no parts of the refrigerating circuit are damaged.
- When transporting and installing the refrigerator, do not touch the water hose on the back side of the refrigerator.
  - This may damage the refrigerator and as a result the water dispenser can not be used.

Untitled-2 6 2018-03-20 7:13:43

Critical installation warnings

⚠ WARNING

- Do not install the refrigerator in a damp location or place where it may come in contact with water.
  - Deteriorated insulation on electrical parts may cause an electric shock or fire.
- Do not place this refrigerator in direct sunlight or expose it to the heat from stoves, room heaters, or other appliances.
- Do not plug several appliances into the same multiple power strip. The refrigerator should always be plugged into its own individual electrical outlet which has a voltage rating that matches the voltage listed on the refrigerator's rating plate.
  - This provides the best performance and also prevents overloading of house wiring circuits, which could cause a fire hazard from overheated wires.
- If the wall socket is loose, do not insert the power plug.
  - There is a risk of electric shock of fire.
- Do not use a power cord that has cracks or abrasion damage along its length or at either end.
- Do not bend the power cord excessively or place heavy objects on it.
- Do not pull or excessively bend the power cord.
- Do not twist or tie the power cord.
- Do not hook the power cord over a metal object, place a heavy object on the power cord, insert the power cord between objects, or push the power cord into the space behind the appliance.
- When moving the refrigerator, be careful not to roll over or damage the power cord.
  - This may result in an electric shock or fire.

Untitled-2 7 2018-03-20 7:13:43

Safety information

- Never unplug your refrigerator by pulling on the power cord. Always grip the plug firmly and pull straight out from the outlet.
  - Damage to the cord may cause a short-circuit, fire, and/or electric shock.
- Do not store explosive substances such as aerosol cans with a flammable propellant in this appliance.
- Do not use aerosols near the refrigerator.
  - Using aerosols near the refrigerator may cause an explosion or fire.
- Do not install this appliance near a heater or inflammable material.
- Do not install this appliance in a location where gas may leak.
  - This may result in an electric shock or fire.
- This refrigerator must be properly located and installed in accordance with the instructions in this manual before you use it.
- Connect the power plug in the proper position with the cord hanging down.
  - If you connect the power plug upside down, the wire can get cut off and cause a fire or electric shock.
- Make sure that the power plug is not crushed or damaged by the back of the refrigerator.
- Keep the packing materials out of reach of children.
  - There is a risk of death from suffocation if a child puts the packing materials on his or her head.
- The appliance must be positioned so that the plug is accessible after installation.
  - Failing to do so may result in an electric shock or fire due to electric leakage.

Untitled-2 8 2018-03-20 7:13:43

- Do not install this appliance in a humid, oily or dusty location, in a location exposed to direct sunlight and water (rain drops).
  - Deteriorated insulation of electrical parts may cause an electric shock or fire.
- If any dust or water is in the refrigerator, pull out power plug and contact your Samsung Electronics service center.
  - Otherwise there is a risk of fire.
- Do not stand on top of the appliance or place objects (such as laundry, lighted candles, lighted cigarettes, dishes, chemicals, metal objects, etc.) on the appliance.
  - This may result in an electric shock, fire, problems with the product, or injury.
- You need to remove all the protective plastic film before you initially plug the product in.
- Children should be supervised to ensure that they do not play with the snap rings used for door adjustment or the water tube clips.
  - There is risk of death by suffocation if a child swallows a snap ring or water tube clip. Keep the snap rings and water tube clips out of children's reach.
- The refrigerator must be safely grounded.
  - Always make sure that you have grounded the refrigerator before attempting to investigate or repair any part of the appliance. Power leakages can cause severe electric shock.
- Never use gas pipes, telephone lines, or other potential lightning attractors as an electrical ground.
  - You must ground the refrigerator to prevent any power leakages or electric shocks caused by current leakage from the refrigerator.
  - This may result in an electric shock, fire, explosion, or problems with the product.

Untitled-2 9 2018-03-20 7:13:43

Safety information

- Plug the power plug into the wall socket firmly. Do not use a damaged power plug, damaged power cord, or loose wall socket.
  - This may result in an electric shock or fire.
- If the power cord is damaged, have it replaced immediately by the manufacturer or one of its service agents.
- The fuse on the refrigerator must be changed by a qualified technician or service company.
  - Failing to do so may result in an electric shock or personal injury.
- When positioning the appliance, ensure the supply cord is not trapped or damaged.
- Do not locate multiple portable socket-outlets or portable power supplies at the rear of the appliance.

Installation cautions

⚠ CAUTION

- Allow sufficient space around the refrigerator and install it on a flat surface.
  - If your refrigerator is not level, cooling efficiency and durability can be declined.
  - Keep the ventilation space in the appliance enclosure or mounting structure clear of obstructions.
- Allow the appliance to stand for 2 hours before loading foods after installation and turning on.
- We strongly recommend you have a qualified technician or service company install the refrigerator.
  - Failing to do so may result in an electric shock, fire, explosion, problems with the product, or injury.

Untitled-2 10 2018-03-20 7:13:43

Critical usage warnings

⚠ WARNING

- Do not insert the power plug into a wall socket with wet hands.
  - This may result in an electric shock.
- Do not store articles on the top of the appliance.
  - When you open or close the door, the articles may fall and cause personal injury and/or material damage.
- Do not insert hands, feet or metal objects (such as chopsticks, etc.) into the bottom or the back of the refrigerator.
  - This may result in an electric shock or injury.
  - Any sharp edges may cause a personal injury.
- Do not touch the inside walls of the freezer or products stored in the freezer with wet hands.
  - This may cause frostbite.
- Do not put a container filled with water on the refrigerator.
  - If spilled, there is a risk of fire or electric shock.
- Do not keep volatile or flammable objects or substances (benzene, thinner, propane gas, alcohol, ether, LP gas, and other such products) in the refrigerator.
  - This refrigerator is for storing food only.
  - This may result in fire or explosion.
- Children should be supervised to ensure that they do not play with the appliance.
  - Keep fingers out of “pinch point” areas. Clearances between the doors and cabinet are necessarily small. Be careful when you open the doors if children are in the area.
- Do not put your fingers or children's fingers between the doors.
  - Keep fingers out of the left and right door gaps. Be careful when you open the doors if your fingers are in between the doors.

Untitled-2 11 2018-03-20 7:13:43

Safety information

- Do not let children hang on the door or door bins. A serious injury may occur.
- Do not let children go inside the refrigerator. They could become trapped.
- Do not insert your hands into the bottom area under the appliance.
  - Any sharp edges may cause personal injury.
- Do not store pharmaceutical products, scientific materials, or temperature sensitive products in the refrigerator.
  - Products that require strict temperature controls must not be stored in the refrigerator.
- Do not place or use electrical appliance inside the refrigerator/ freezer, unless they are of a type recommended by the manufacturer.
- If you smell pharmaceutical or smoke, pull out power plug immediately and contact your Samsung Electronics service center.
- If any dust or water is in Refrigerator, pull out power plug and contact your Samsung Electronics service center.
  - Otherwise there is a risk of fire.
- Do not let children step on a drawer.
  - The drawer may break and cause them to slip.
- Do not leave the doors of the refrigerator open while the refrigerator is unattended and do not let children enter inside the refrigerator.
- Do not allow babies or children go inside the drawer.
  - It can cause death from suffocation by entrapment or personal injury.
- Do not overfill the refrigerator with food.
  - When you open the door, an item may fall out and cause personal injury or material damage.

Untitled-2 12 2018-03-20 7:13:43

- Do not spray volatile material such as insecticide onto the surface of the appliance.
  - As well as being harmful to humans, it may also result in an electric shock, fire, or problems with the product.
- Never put fingers or other objects into the water dispenser hole, ice chute and ice maker bucket.
  - It may cause a personal injury or material damage.
- Do not use or place any substances sensitive to temperature such as flammable sprays, flammable objects, dry ice, medicine, or chemicals near or inside of the refrigerator.
- Do not use a hair dryer to dry the inside of the refrigerator. Do not place a lighted candle in the refrigerator for removing bad odours.
  - This may result in an electric shock or fire.
- Fill the water tank, ice tray and water cubes only with potable water (mineral water or purified water).
  - Do not fill the tank with tea, juice or sports drink, this may damage the refrigerator.
- Do not stand on top of the appliance or place objects (such as laundry, lighted candles, lighted cigarettes, dishes, chemicals, metal objects, etc.) on the appliance. This may result in an electric shock, fire, problems with the product, or injury. Do not put a container filled with water on the appliance.
  - If spilled, there is a risk of fire or electric shock.
- Do not use mechanical devices or any other means to accelerate the defrosting process, other than those recommended by the manufacturer.
- Do not damage the refrigerant circuit.
- Never stare directly at the UV LED lamp for long periods of time.
  - This may result in eye strain due to the ultraviolet rays.

Untitled-2 13 2018-03-20 7:13:43

Safety information

- Do not put fridge shelf in upside down. Shelf stopper could not work.
  - It may cause a personal injury because of glass shelf drop.
- Keep fingers out of “pinch point” areas. Clearances between the doors and cabinet are necessarily small. Be careful when you open the doors if children are in the area.
- If a gas leak is detected, avoid any naked flames or potential sources of ignition, and air the room in which the appliance is standing for several minutes.
  - Do not touch the appliance or power cord.
  - Do not use a ventilating fan.
  - A spark may result in explosion or fire.
- Use only the LED Lamps provided by the manufacturer or its service agents.
- Bottles should be stored tightly together so that they do not fall out.
- This product is intended only for the storage of food in a domestic environment.
- Never put fingers or other objects into the water dispenser hole, ice chute and ice maker bucket.
  - It may cause a personal injury or material damage.
- Do not attempt to repair, disassemble, or modify the refrigerator yourself.
- Do not use any fuse (such as cooper, steel wire, etc.) other than a standard fuse.
- If your refrigerator needs to be repaired or reinstalled, contact your nearest service center.
  - Failing to do so may result in an electric shock, fire, problems with the product, or injury.

Untitled-2 14 2018-03-20 7:13:43

- If the interior or exterior LED lamp has gone out, contact your nearest service center.
- If the refrigerator emits a burning smell or smoke, unplug the refrigerator immediately and contact your Samsung Electronics service center.
  - Failing to do so may result in an electric or fire hazards.
- Pull the power plug out of the socket before changing the interior lamps of the refrigerator.
  - Otherwise, there is a risk of electric shock.
- If you experience difficulty changing a non-LED light, contact a Samsung service center.
- If the product is equipped with LED lamps, do not disassemble the Lamp Covers and LED lamps yourself.
  - Contact a Samsung service center.
- Plug the power plug into the wall socket firmly.
- Do not use a damaged power plug, damaged power cord or loose wall socket.
  - This may result in an electric shock or fire.

Untitled-2 15 2018-03-20 7:13:43

Safety information

Usage cautions

⚠ CAUTION

- Do not re-freeze frozen foods that have thawed completely. Do not place carbonated or fizzy drinks in the freezer compartment. Do not put bottles or glass containers in the freezer.
  - When the contents freeze, the glass may break and cause personal injury.
- Use only the ice maker provided with the refrigerator.
- Have the refrigerator's water supply connected only to a potable water supply. To operate the ice maker properly, water pressure of 138 ~ 862 kPa is required. If you will be away from home for a long period of time (on vacation, for example) and won't be using the water or ice dispensers, close the water valve.
  - Otherwise, water leakage may occur.
- If you won't be using the refrigerator for a very long period of time, (3 weeks or more) empty the refrigerator including the ice bucket, unplug it, close the water valve, wipe excess moisture from the inside walls, and leave the doors open to prevent odors and mold.
- To get the best performance from the product:
  - Do not place food too close to the vents at the rear of the refrigerator as this can obstruct free air circulation in the refrigerator compartment.
  - Wrap food up properly or place it in airtight containers before putting it into the refrigerator.
  - Do not place glass bottles or carbonated beverages into the freezer. They can freeze and break. Broken beverage containers can cause injury.
  - Please observe maximum storage times and expiration dates of frozen goods.

Untitled-2 16 2018-03-20 7:13:43

- There is no need to disconnect the refrigerator from the power supply if you will be away for less than three weeks. However, if you will be away for more than three weeks, remove all the food and ice in the ice bucket, unplug the refrigerator, close the water valve, wipe excess moisture from the inside walls, and leave the doors open to prevent odors and mold.

- Do not place glass or bottles or carbonated beverages into the freezer.
  - The container may freeze and break, and this may result in injury.
- Do not place carbonated or fizzy drinks in the freezer compartment. Do not put bottles or glass containers in the freezer.
  - When the contents freeze, the glass may break and cause personal injury and property damage.
- Service Warranty and Modification.
  - Any changes or modifications performed by a 3rd party on this finished appliance are not covered under Samsung warranty service, nor is Samsung responsible for safety issues that result from 3rd party modifications.
- Do not block the air vents inside the refrigerator.
  - If the air vents are blocked, especially with a plastic bag, the refrigerator can be over cooled. If a cooling period lasts too long, the water filter may break and cause water leakage.
- Use only the ice-maker provided with the refrigerator.
- Wipe excess moisture from the inside and leave the doors open.
  - Otherwise, odor and mold may develop.
- If the refrigerator is disconnected from the power supply, you should wait for at least five minutes before plugging it back in.

Untitled-2 17 2018-03-20 7:13:43

Safety information

- If you have a long vacation planned or do not intend to use the refrigerator for a long period of time, (3 weeks or more) empty the refrigerator including the ice bucket, pull out the power plug, close the water valve, wipe excess moisture from the inside walls, and leave the doors open to prevent odors and mold.
- When the refrigerator got wet by water, pull out the power plug and contact your Samsung Electronics service center.
- Do not strike or apply excessive force to any glass surface.
  - Broken glass may result in a personal injury and/or property damage.
- Fill the water tank and ice cube trays with potable water only (tap water, mineral water, or purified water).
  - Do not fill the tank with tea or a sports drink. This may damage the refrigerator.
- Be careful that your fingers are not caught in.
- If the refrigerator is flooded, make sure to contact your nearest service center.
  - There is a risk of electric shock or fire.
- Do not keep vegetable oil in your refrigerator's door bins. The oil can solidify, making it foul-tasting and difficult to use. In addition, the open container can leak and the leaked oil can cause the door bin to crack. After opening an oil container, it is best to keep the container in a cool and shaded place such as a cupboard or pantry.
  - Examples of vegetable oil: olive oil, corn oil, grape-seed oil, etc.

Untitled-2 18 2018-03-20 7:13:43

Cleaning cautions

⚠ CAUTION

- Do not spray water directly on the inside or outside the refrigerator.
  - There is a risk of fire or electric shock.
- Do not use a hair dryer to dry the inside of the refrigerator.
- Do not place a lighted candle in the refrigerator to remove bad odors.
  - This may result in an electric shock or fire.
- Do not spray cleaning products directly on the display.
  - Printed letters on the display may come off.
- If any foreign substance such as water has entered the appliance, unplug the power plug and contact your nearest service center.
  - Failing to do so may result in an electric shock or fire.
- Use a clean, dry cloth to remove any foreign matter or dust from the power plug blades. Do not use a wet or damp cloth when cleaning the plug.
  - Otherwise, there is a risk of fire or electric shock.
- Do not clean the appliance by spraying water directly onto it.
- Do not use benzene, thinner, or Clorox, Chloride for cleaning.
  - They may damage the surface of the appliance and may cause a fire.
- Never put fingers or other objects into the dispenser hole.
  - It may cause a personal injury or material damage.
- Before cleaning or performing maintenance, unplug the appliance from the wall socket.
  - Failing to do so may result in an electric shock or fire.
- Use a clean sponge or soft cloth and a mild detergent in warm water to clean the refrigerator.

Untitled-2 19 2018-03-20 7:13:43

Safety information

- Do not use abrasive or harsh cleansers such as window sprays, scouring cleansers, flammable fluids, muriatic acid, cleaning waxes, concentrated detergents, bleaches, or cleansers containing petroleum products on exterior surfaces (doors and cabinet), plastic parts, door and interior liners, and gaskets.
  - These can scratch or damage the material.
- Do not clean glass shelves or covers with warm water when they are cold. Glass shelves and covers may break if exposed to sudden temperature changes or impacts such as bumping or dropping.

Untitled-2 20 2018-03-20 7:13:43

Critical disposal warnings

⚠ WARNING

- Please dispose of the packaging material from this product in an environmentally friendly manner.
- Ensure that none of the pipes on the back of the refrigerator are damaged prior to disposal.
- R-600a or R-134a is used as a refrigerant. Check the compressor label on the rear of the appliance or the rating label inside the fridge to see which refrigerant is used for your refrigerator. If this refrigerator contains flammable gas (Refrigerant R-600a), contact your local authority in regard to safe disposal of this product.
- When disposing of this refrigerator, remove the door/door seals and door latch so that small children or animals cannot become trapped inside. Children should be supervised to ensure that they do not play with the appliance. If trapped inside, a child may get hurt or suffocate to death.
  - If trapped inside, the child may become injury and suffocate to death.
- Cyclopentane is used in the insulation. The gases in the insulation material require a special disposal procedure. Please contact your local authorities in regard to the environmentally safe disposal of this product.
- Keep all packaging materials well out of the reach of children, as packaging materials can be dangerous to children.
  - If a child places a bag over his or her head, the child could suffocate.

Untitled-2 21 2018-03-20 7:13:44

Safety information

Additional tips for proper usage

- In the event of a power failure, call the local office of your electric company and ask how long the failure is going to last.
  - Most power failures that are corrected in an hour or two will not affect your refrigerator temperatures. However, you should minimize the number of door openings while the power is off.
  - Should the power failure last more than 24 hours, remove and discard all frozen food.
- The refrigerator might not operate consistently (frozen contents can thaw or temperatures can become too warm in the frozen food compartment) if sited for an extended period of time in a location where ambient air temperatures are constantly below the temperatures for which the appliance is designed.
- In case of particular foods, keeping it under refrigeration can have a bad effect on preservation due to its properties.
- Your appliance is frost free, which means there is no need to manually defrost your appliance. This will be carried out automatically.
- Temperature rise during defrosting complies with ISO requirements. If you want to prevent an undue rise in the temperature of frozen food while the appliance defrosts, wrap the frozen food in several layers of newspaper.
- Do not re-freeze frozen foods that have thawed completely.
- The temperature of two star section (sections) or compartment (compartments) which have two star symbol (**) is slightly higher than other freezer compartment (compartments).
  The two star section (sections) or compartment (compartments) is (are) based on the instruction and/or the condition as delivered.

Untitled-2 22 2018-03-20 7:13:44

Saving Energy Tips

- Install the appliance in a cool, dry room with adequate ventilation. Ensure that it is not exposed to direct sunlight and never put it near a direct source of heat (a radiator, for example).
- Not to block any vents and grilles is recommended for energy efficiency.
- Allow warm food to cool down before placing it in the appliance.
- Put frozen food in the refrigerator to thaw. You can then use the low temperatures of the frozen products to cool food in the refrigerator.
- Do not keep the door of the refrigerator open for too long when putting food in or taking food out. The shorter the time the door is open, the less frost build-up you'll have in the freezer.
- It is recommended to install the refrigerator with clearance to the back and sides. This will help reduce power consumption and keep your energy bills lower.
- For the most efficient use of energy, please keep the all inner fittings such as baskets, drawers, shelves on the position supplied by manufacturer.

This appliance is intended to be used in household and similar applications such as

- staff kitchen areas in shops, offices and other working environments;
- farm houses and by clients in hotels, motels and other residential type environments;
- bed and breakfast type environments;
- catering and similar non-retail applications.

Untitled-2 23 2018-03-20 7:13:44

Safety information

Instructions about the WEEE

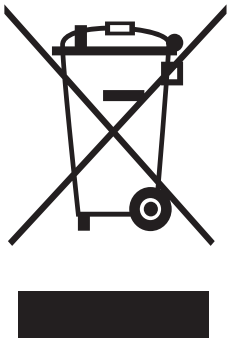

Correct Disposal of This Product (Waste Electrical & Electronic Equipment)

(Applicable in countries with separate collection systems)

This marking on the product, accessories or literature indicates that the product and its electronic accessories (e.g. charger, headset, USB cable) should not be disposed of with other household waste at the end of their working life. To prevent possible harm to the environment or human health from uncontrolled waste disposal, please separate these items from other types of waste and recycle them responsibly to promote the sustainable reuse of material resources.

Household users should contact either the retailer where they purchased this product, or their local government office, for details of where and how they can take these items for environmentally safe recycling.

Business users should contact their supplier and check the terms and conditions of the purchase contract. This product and its electronic accessories should not be mixed with other commercial wastes for disposal.

For information on Samsung's environmental commitments and product specific regulatory obligations e.g. REACH visit: samsung.com/uk/aboutsamsung/samsungelectronics/corporatecitizenship/data_corner.html

(For products sold in European countries only)

Untitled-2 24 2018-03-20 7:13:44

Installation

Follow these instructions carefully to ensure a proper installation of this refrigerator and to prevent accidents before using it.

⚠ **WARNING**

- Use the refrigerator only for its intended purpose as described in this manual.
- Any servicing must be performed by a qualified technician.
- Dispose of the product packaging material in compliance with the local regulations.
- To prevent electric shock, unplug the power cord before servicing or replacements.

Refrigerator at a glance

The actual appearance of your refrigerator may differ, depending on the model and the country.

Dispenser-featured models

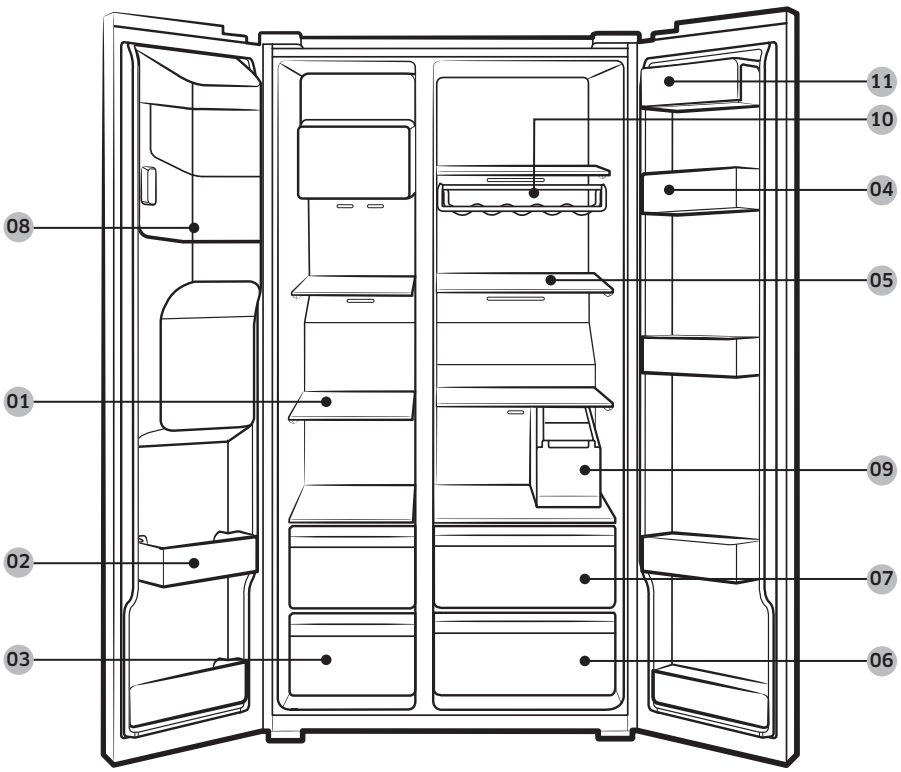

Untitled-2 25 2018-03-20 7:13:44

Installation

Normal models

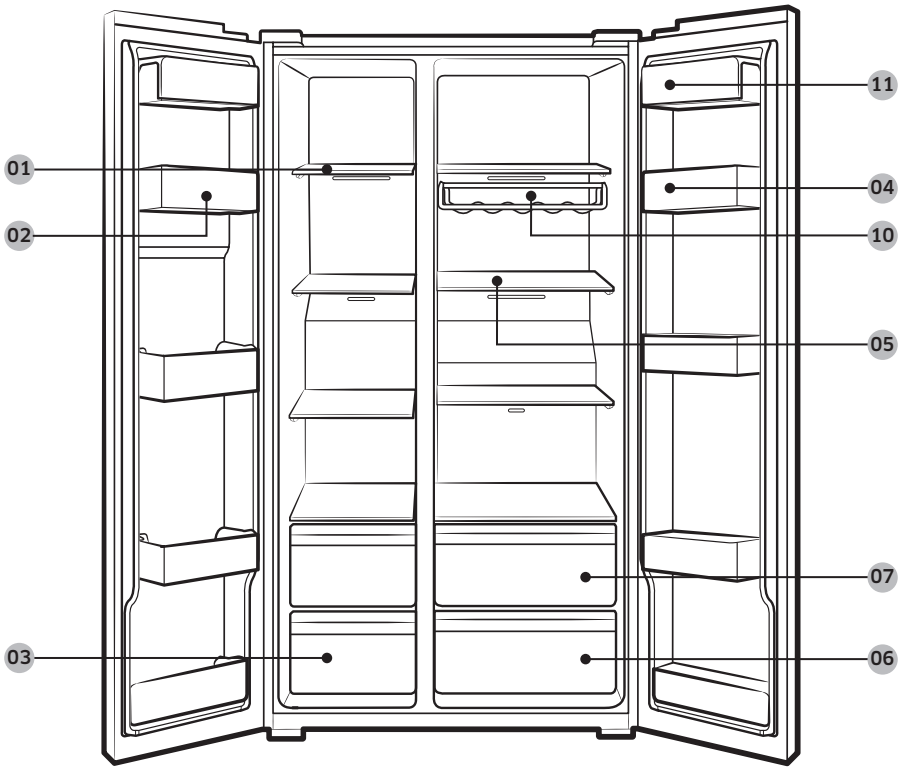

01 Freezer shelves

02 Multipurpose freezer bin

03 Dried food and meat storage drawer

04 Refrigerator bin

05 Refrigerator shelves

06 Vegetable drawer

07 Multipurpose drawer

08 Ice maker bucket **

09 Water tank *

10 Wine rack *

11 Dairy bin

* Applicable models only

** Dispenser models only

NOTE

The design of the egg container may differ with the model.

Untitled-2 26 2018-03-20 7:13:44

Step-by-step installation

STEP 1 Select a site

Site requirements:

- Solid, level surface without carpeting or flooring that may obstruct ventilation
- Away from direct sunlight
- Adequate room for opening and closing the door
- Away from a heat source
- Room for maintenance and servicing
- Temperature range: between 5 °C and 43 °C

Effective temperature range

The refrigerator is designed to operate normally in the temperature range specified by its class rating.

Class	Symbol	Ambient Temperature range (°C)	
		IEC 62552 (ISO 15502)	ISO 8561
Extended Temperate	SN	+10 to +32	+10 to +32
Temperate	N	+16 to +32	+16 to +32
Subtropical	ST	+16 to +38	+18 to +38
Tropical	T	+16 to +43	+18 to +43

NOTE

The cooling performance and power consumption of the refrigerator may be affected by the ambient temperature, the door-opening frequency, and the location of the refrigerator. We recommend adjusting the temperature settings as appropriate.

Untitled-2 27 2018-03-20 7:13:44

Installation

Installation

Clearance

See the pictures and table below for space requirements for installation.

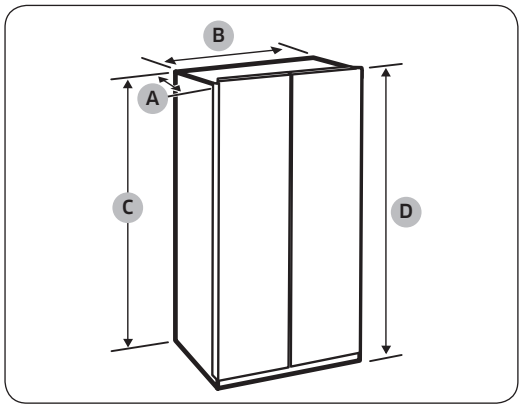

Depth “A” Recess Handle Type	716
Depth “A” Bar Handle Type	772
Width “B”	908
Height “C”	1747
Overall Height “D”	1780

(unit: mm)

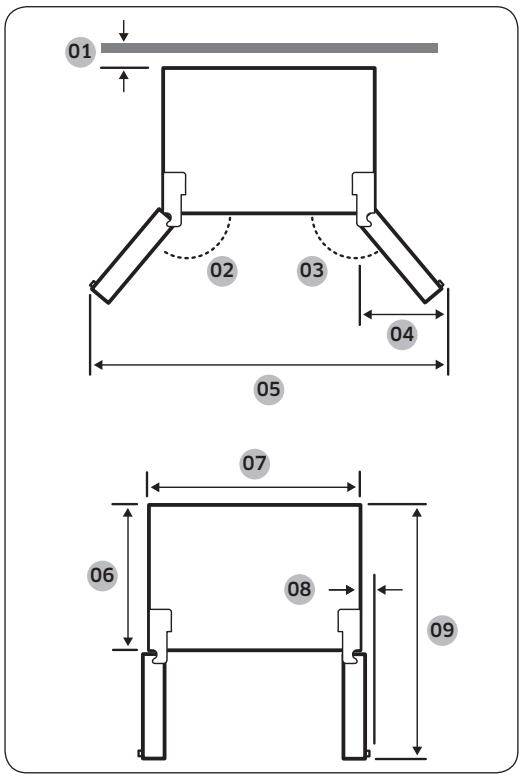

01 50 mm
02 165°
03 170°
04 564 mm
05 1726 mm
06 610 mm
07 908 mm
08 29 mm (without handle)
09 1165 mm

NOTE

The measurements in the above table may differ, depending on the measuring method.

Untitled-2 28 2018-03-20 7:13:44

STEP 2 Wi-Fi connection

You can control the refrigerator remotely using the Smart Home Adapter that is sold separately. To purchase the Smart Home Adapter, visit www.samsung.com and follow the product information about the adapter.

NOTE

You may not be able to purchase the Smart Home Adapter separately in some countries. Please check with your dealer for availability.

CAUTION

- The Samsung Smart Home Adapter comes in two types: one that is dedicated to Samsung smart TVs, and the other one that is dedicated to Samsung home appliances.
- You must purchase the Samsung Smart Home Adapter (HD39N1230GW) dedicated to home appliances. Any other adapters may cause system failure.

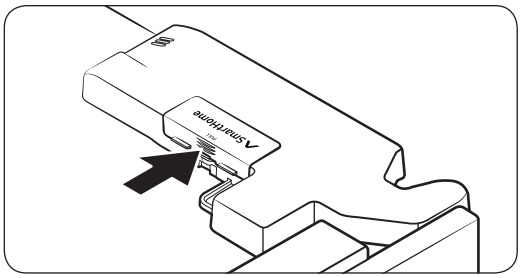

1. Press to unlock the arrow area of the adapter cover.

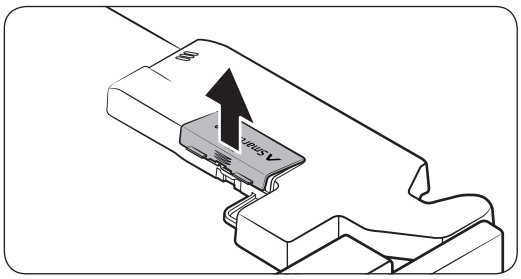

2. Open up the adapter cover.

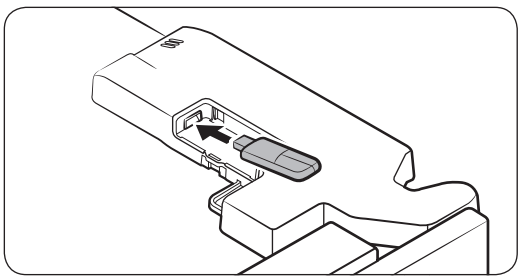

3. Insert the Smart Home Adapter into the adapter port in the correct direction.

Installation

Untitled-2 29 2018-03-20 7:13:45

Installation

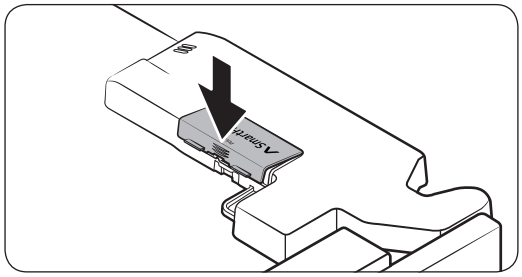

4. Insert the upper area of the adapter cover first, and then close to lock as shown.

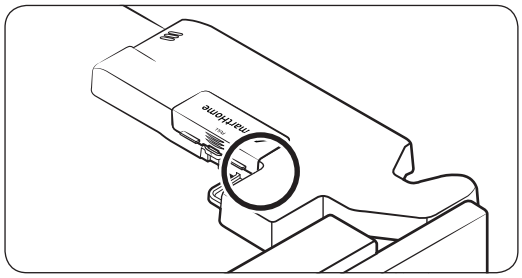

NOTE

The marked area is the cover of the optional adapter, not a crack or defect.

STEP 3 Spacing (applicable models only)

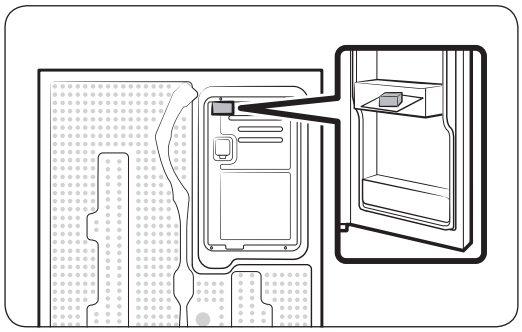

1. Open the door and locate the provided spacer.
2. Unpack the spacer and attach it to the rear of the refrigerator as shown. It helps ventilate air to the rear wall and save power consumption.

Untitled-2 30 2018-03-20 7:13:45

STEP 4 Flooring

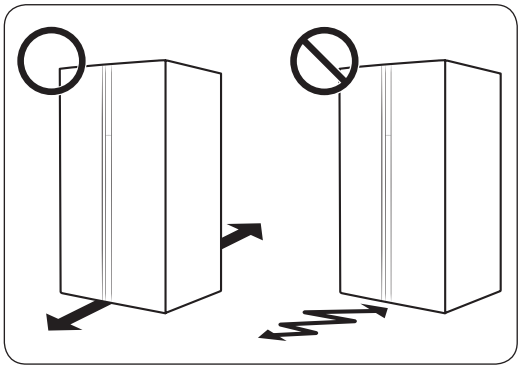

- The surface to install the refrigerator must support a fully loaded refrigerator.
- To protect the floor, put a large piece of cardboard on each leg of the refrigerator.
- Once the refrigerator is in its final position, do not move it unless necessary to protect the floor. If you have to, use a thick paper or cloth such as old carpets along the movement path.

NOTE

If the refrigerator cannot pass through the entrance due to its size, see the **Door removal for entrance** section in the Installation chapter.

Untitled-2 31 2018-03-20 7:13:45

Installation

STEP 5 Adjust the levelling feet

⚠ **CAUTION**

- The refrigerator must be levelled on a flat, solid floor. Failing to do so can cause damage to the refrigerator or physical injury.
- Levelling must be performed with an empty refrigerator. Make sure no food items remain inside the refrigerator.
- For safety reasons, adjust the front side a little higher than the rear side.

The refrigerator can be levelled using the front legs that have a special screw (leveller) for levelling purposes. Use a flat-head screwdriver for levelling.

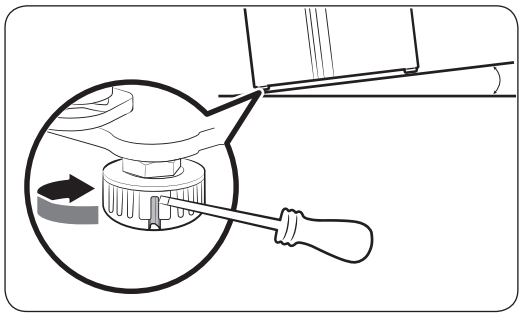

To adjust the height of the freezer side:

Insert a flat-head screwdriver into the leveller of the freezer-side front leg. Turn the leveller clockwise to raise, or turn it counter clockwise to lower.

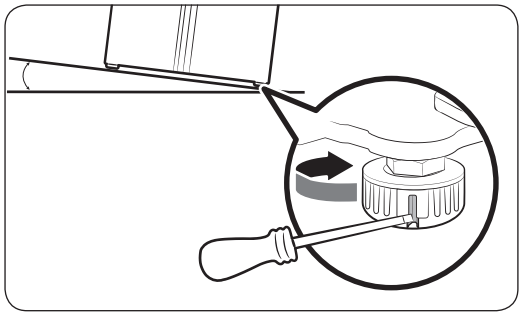

To adjust the height of the fridge side:

Insert a flat-head screwdriver into the leveller of the fridge-side front leg. Turn the leveller clockwise to raise, or turn it counter clockwise to lower.

Untitled-2 32 2018-03-20 7:13:46

STEP 6 Adjust the door height as well as the door gap

To adjust the height of a door

The height of a door can be adjusted using the clamp nut and the height nut on the front bottom of each door.

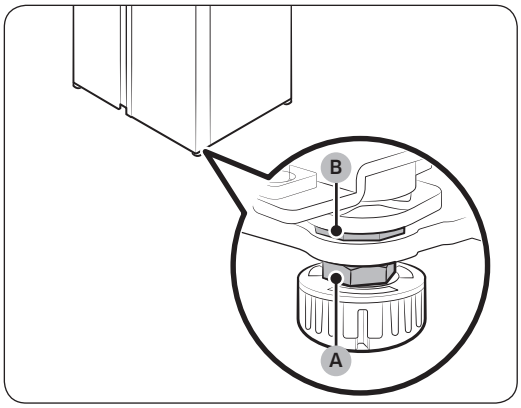

1. Open the door to adjust, and locate the two nuts (A) and (B) on the front bottom of the door.

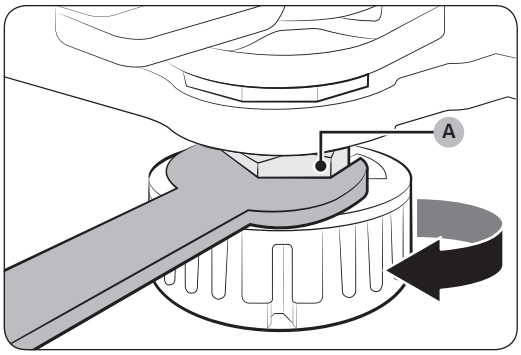

2. With a 19 mm spanner (not provided), turn the clamp nut (A) clockwise to loosen. Then, open the door, and do the following inside the door.
   - To raise the door, turn the height nut (B) counter clockwise.
   - To lower the door, turn the height nut (B) clockwise.

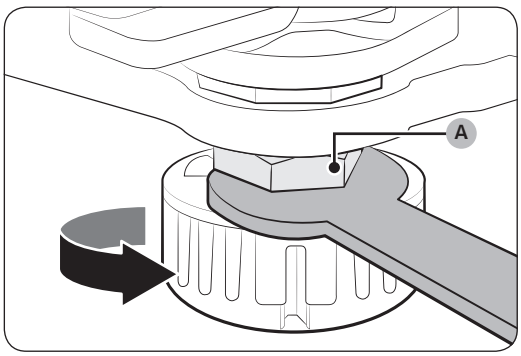

3. When complete, tighten the clamp nut (A) by turning it counter clockwise.

Untitled-2 33 2018-03-20 7:13:46

Installation

STEP 7 Connect the water dispenser line (applicable models only)

Parts and tools required

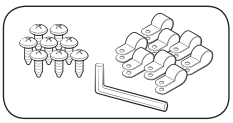

Water line fixer and screws

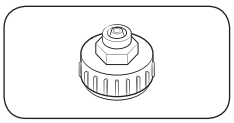

Coupler

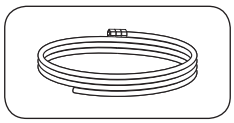

Water line

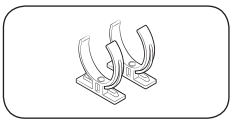

Water filter lock-clip

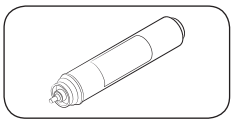

Water filter

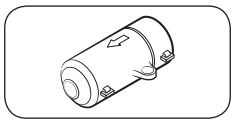

Check valve

Installation (external dispenser line)

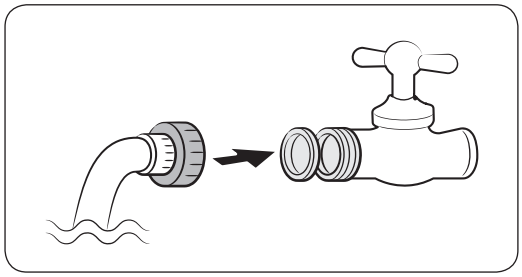

1. Assemble the water pipe line using couplers.
2. Close the main water supply, and then close the water tap.
3. Connect the coupler to the cold water tap.

⚠ **CAUTION**

- Make sure you connect the coupler to the cold water tap. Connection to the hot water tap may cause the water filter to be clogged and fail to operate normally.
- The warranty for your refrigerator does not cover the water line installation. The water line installation will be performed at your own costs unless the installation fee is included in the retailer's price.
- Samsung takes no responsibility for the water line installation. If water leaks occur, contact the installer of the water line.
- The water line must be repaired by a qualified professional. If you encounter a water leak, contact a local Samsung service centre or the installer of the water line.

Untitled-2 34 2018-03-20 7:13:47

STEP 8 Connect to a water source (applicable models only)

⚠ **CAUTION**

- The water line must be connected by a qualified technician.
- The warranty for your refrigerator does not cover the water line installation. The water line installation will be performed at your own costs unless the installation fee is included in the retailer's price.
- Samsung takes no responsibility for the water line installation. If water leaks occur, contact the installer of the water line.

To connect the cold water pipe to the water filtering hose

⚠ **CAUTION**

- Make sure the water filtering hose is connected to a cold, potable water source pipe. Connecting to the hot water pipe may cause the water filter to malfunction.

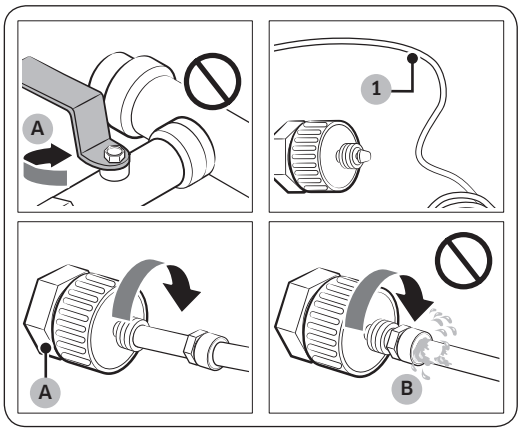

A. Close Main Water pipe

B. No gap

1. Shut off the water supply by closing the main water valve.
2. Locate the cold, potable water pipe (1).
3. Follow the Water Line Installation to connect to the water pipe.

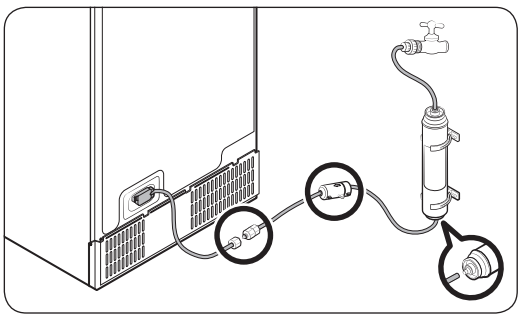

NOTE

New hose-sets supplied with the appliance are to be used and old hose-sets should not be reused.

Untitled-2 35 2018-03-20 7:13:47

Installation

To connect the water filtering hose to the water line

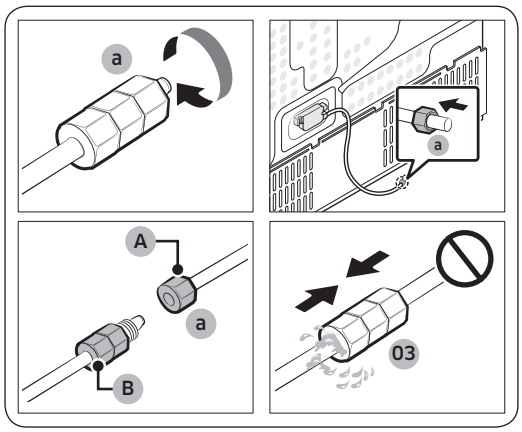

A. Water Line from unit

B. Water Line from Kit

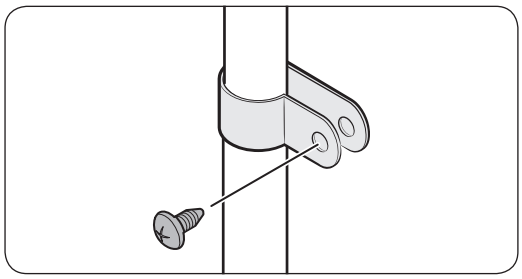

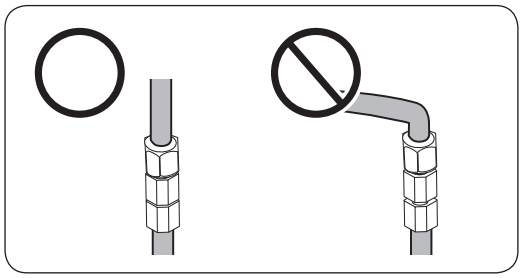

1. Loosen and remove the **compression nut (a)** from the water line of the refrigerator, and insert it to the water filtering hose.
2. Tighten up the **compression nut (a)** to connect the water filtering hose and the water line.
3. Open the main water valve and check for any leaks.
4. If there are no leaks, dispense about 10 litres of water or dispense the water for 6 - 7 minutes before actually using the refrigerator to remove impurities inside the water filtering system.
5. Secure the water line to a sink or a wall using a clip.

⚠ **CAUTION**

- Do not tighten the water line excessively. Make sure the water line is not bent, pinched, or squashed.
- Do not mount the water line on any part of the refrigerator. This may damage the refrigerator.

NOTE

If you have to relocate the refrigerator after connecting the water line, make sure the joined section of the water line must is straight.

To repair the water line

⚠ **CAUTION**

The water line must be repaired by a qualified professional. If you encounter a water leak, contact a local Samsung service centre or the installer of the water line.

Untitled-2 36 2018-03-20 7:13:47

Reverse osmosis water filtration system

The water pressure of the water supply system to a reverse osmosis water filtration system must be between 241 kPa and 827 kPa.

The water pressure of the reverse osmosis water filtration system to the refrigerator's cold water line must be at least 276 kPa. If the water pressure is below the specified:

- Check if the sediment filter in the reverse osmosis system is blocked. Replace the filter if necessary.
- Refill the water tank in the reverse osmosis system with water.
- If your refrigerator has a water filter, it may further reduce the water pressure when used in conjunction with a reverse osmosis system. Remove the water filter.

For more information or servicing, contact a licensed plumbing professional.

Ordering a new filter

To purchase a new water filter (part type: **HAFEX/EXP**), contact a local Samsung service centre.

To mount the water filter into place

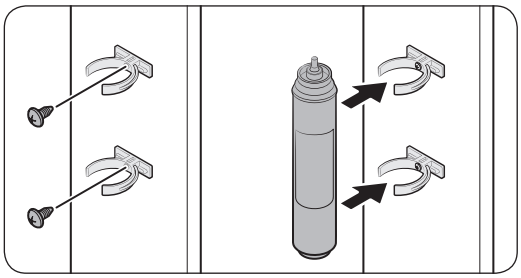

1. Attach the **lock clips** (x2) to appropriate positions under the sink, for instance. Then, fix the **lock clips** firmly using screws.
2. Insert the **water filter** into the upper and lower clips in the correct direction. Make sure to check the vertical direction of the **water filter**.

NOTE

If the filter is installed horizontally, water may remain in the filter. Therefore, vertical installation is recommended.

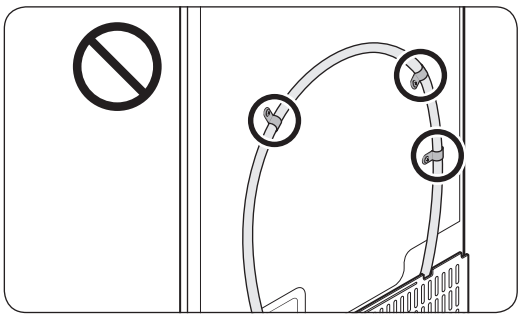

CAUTION

Do not mount the water filter on any part of the refrigerator. This may damage the refrigerator.

Untitled-2 37 2018-03-20 7:13:48

Installation

Water filter replacement (applicable models only)

⚠ **CAUTION**

- Do not use third-party water filters. Use only Samsung-provided or -approved filters.
- Unapproved filters may leak and damage the refrigerator, causing electric shock. Samsung holds no responsibility for any damage that may occur from use of third party water filters.
- The filter indicator turns red as a reminder that lets you know it is time to replace the water filter.

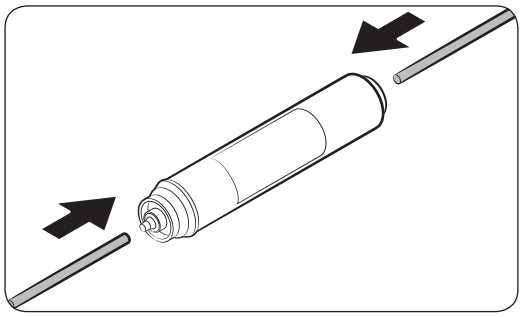

1. Shut off the main water supply.
2. Connect the water supply line to the inlet side of the filter to the end.
3. Connect the dispenser line to the outlet side of the filter.

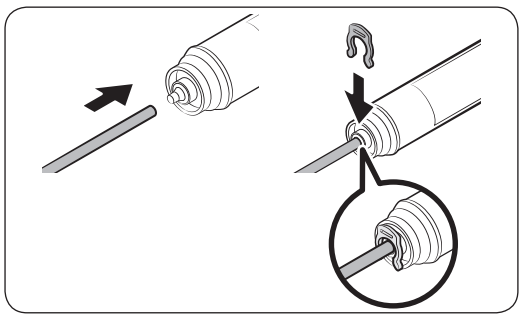

4. Check if there is any leak. If not, fix the lines with the clips.
5. Put the water filter into place and fix it with the clips.
6. Press and hold **Filter Reset** for 3 seconds to reset the filter lifecycle.
7. When replacing is complete, flush 10 litres of water (or dispense the water for 6 - 7 minutes) to remove impurities from the water line.

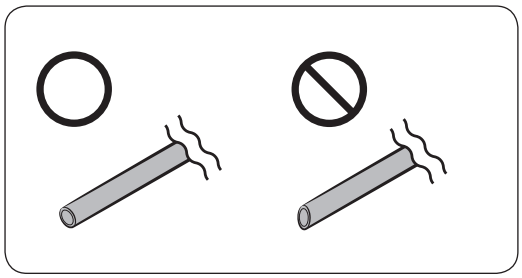

⚠ **CAUTION**

When adjusting the length of the water line tubing, make sure to smooth out the cut surface at a right angle. This is to prevent a water leak.

Untitled-2 38 2018-03-20 7:13:48

NOTE

- A newly installed filter may cause the water dispenser to spurt water briefly. This is because air has entered the water line.
- This replacement process may involve the refrigerator to drip water onto the floor. If this happens, wipe up with dry cloths.

Untitled-2 39 2018-03-20 7:13:48

Installation

STEP 9 To attach the handles (applicable models only)

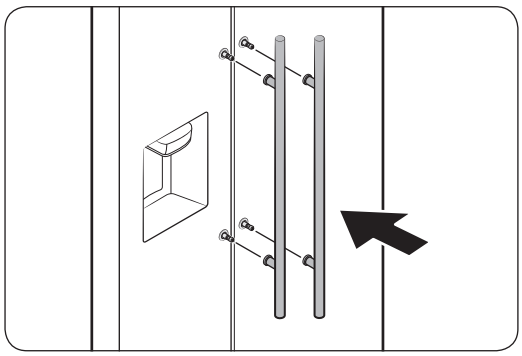

1. Attach the handle supports on the brackets.

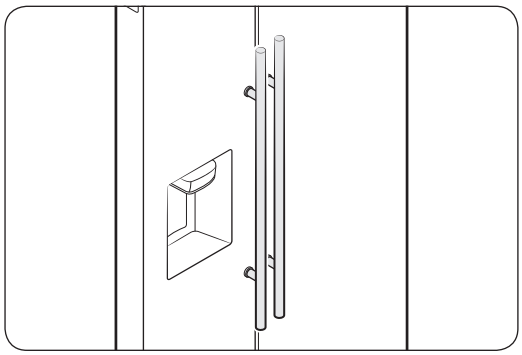

2. Firmly press the handles at the supports.

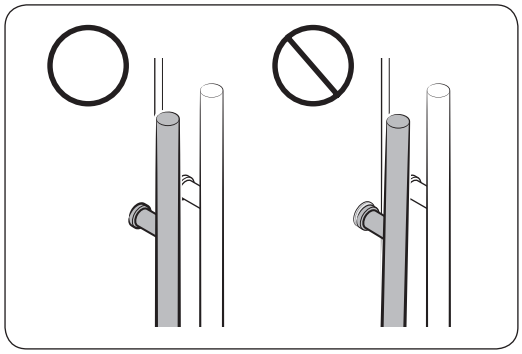

NOTE

Make sure there is no gap between the supports and the door.

Untitled-2 40 2018-03-20 7:13:48

STEP 10 Initial settings

By completing the following steps, the refrigerator should be fully functioning.

1. Plug the power cord into the wall socket to turn the refrigerator on.
2. Open the door, and check if the interior light lights up.
3. Set the temperature to the coldest, and wait for about an hour. Then, the freezer will be slightly chilled, and the motor will run smoothly.
4. Wait until the refrigerator reaches the set temperature. Now the refrigerator is ready for use.

STEP 11 Final check

When installation is complete, confirm that:

- The refrigerator is plugged into an electrical outlet and grounded properly.
- The refrigerator is installed on a flat, level surface with a reasonable clearance from the wall or the cabinet.
- The refrigerator is level and is sitting firmly on the floor.
- The door opens and closes freely, and the interior light turns on automatically when you open the door.

Untitled-2 41 2018-03-20 7:13:48

Installation

Door removal for entrance

If the refrigerator cannot pass through the entrance due to its size, follow these instructions:

Tools required (not provided)

These tools are used for removing the doors.

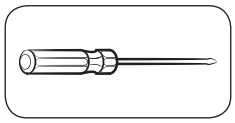

Phillips screwdriver

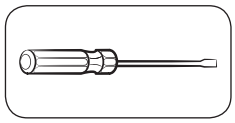

Flat-heat screwdriver

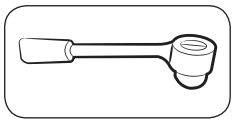

Socket spanner (10 mm)

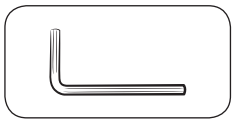

Allen spanner (5 mm)

Disconnect the water line

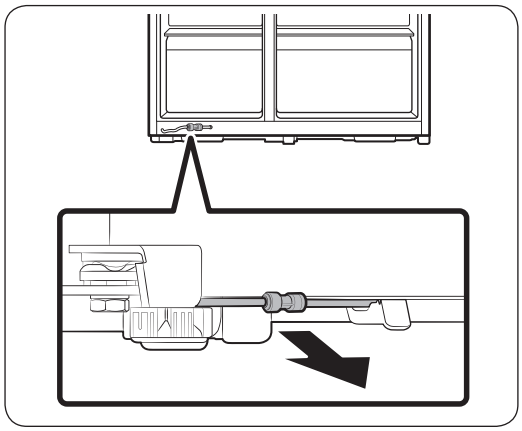

1. From the bottom rear side of the refrigerator, pull out the water line to the front.

NOTE

The refrigerator's water line is a water circulation line that connects between the water pipe from the water source and the hoses from the water filtering system of the refrigerator.

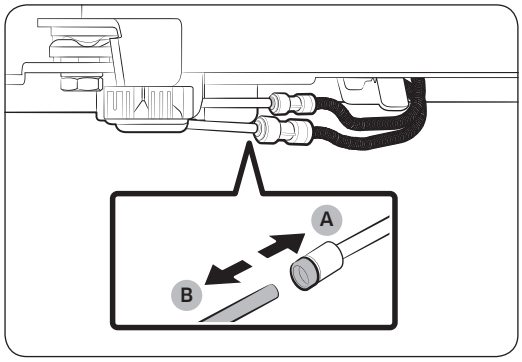

2. To disconnect the hoses, press and hold the **transparent coupler (A)** and detach the **water hose (B)**.

CAUTION

Do not apply excessive force to the coupler. It may break.

Untitled-2 42 2018-03-20 7:13:49

Detach the doors

⚠ **CAUTION**

The door may fall off or over and damage itself during any of these steps. To prevent an accident, use extreme caution when performing these steps.

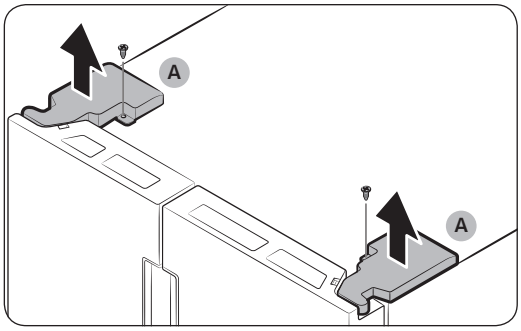

1. Use a Phillips screwdriver to unscrew the **hinge covers (A)** on the top of each door.
2. Open the doors to loosen the hinges and remove the hinge covers. Once the covers are removed, close the doors.

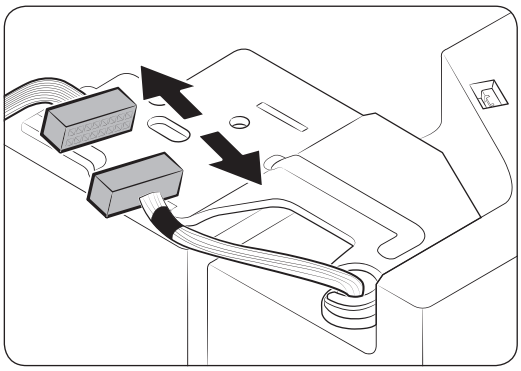

3. Disconnect the electrical harness.

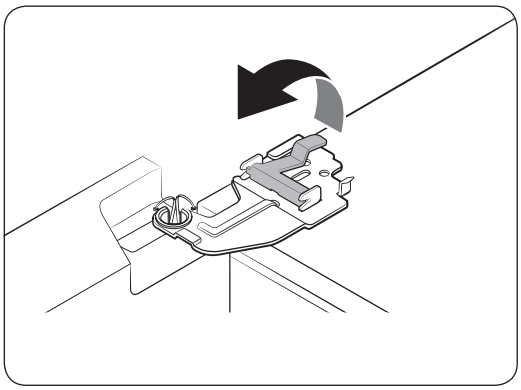

4. Gently lift the clamp.

NOTE

To prevent damage to the clamp or injuries, do not lift the clamp forcefully.

Untitled-2 43 2018-03-20 7:13:50

Installation

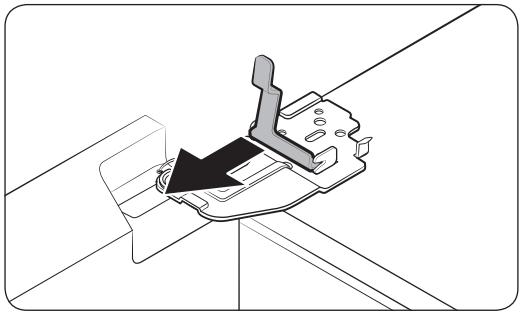

5. Pull the clamp to remove.

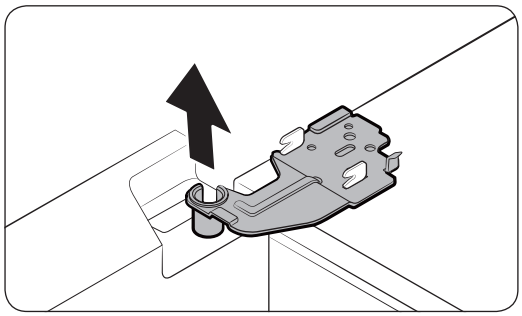

6. Open the door by 90 degrees. While holding the door, remove the hinge.

⚠ **CAUTION**

If you remove the hinge without holding the door, the door may fall and cause injury.

Reconnect the water hoses

Once the refrigerator has passed through the entrance, reconnect the water hoses.

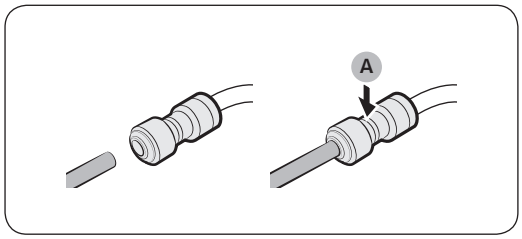

A. Centre of transparent coupler

⚠ **CAUTION**

- Make sure the water hoses are connected with matching colours.
- To prevent water leaks, each water hose must be inserted fully to the centre of the transparent coupler.
- After reconnecting the water hoses, push them under the cabinet and arrange them on the hook.

Untitled-2 44 2018-03-20 7:13:50

Reattach the doors

⚠ **CAUTION**

- Before reattaching the doors, make sure all the electrical connectors are properly connected.
- The freezer door must be reattached before the fridge door.

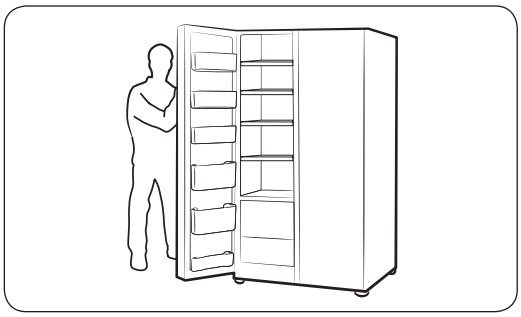

1. Hold the freezer door and hook to the hinge at the bottom of the refrigerator.

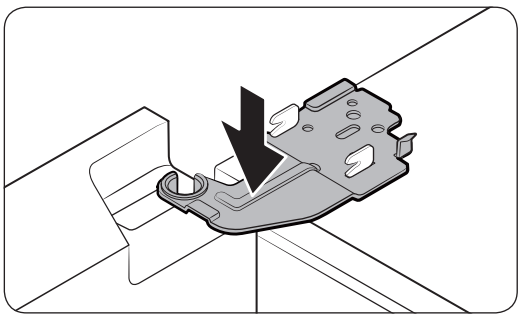

2. Put the hinge into its position, and then insert it into the hole on the door.

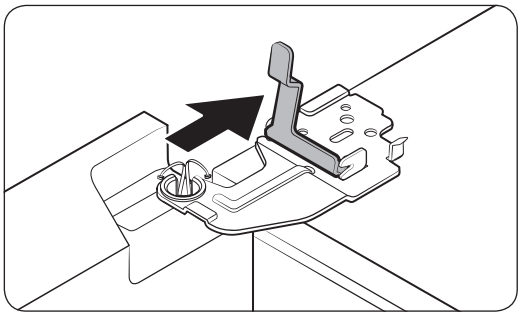

3. Insert the clamp in the arrow direction.

Untitled-2 45 2018-03-20 7:13:50

Installation

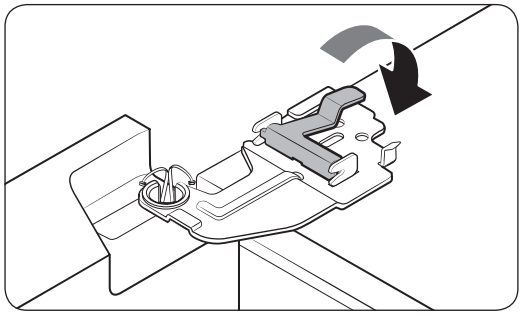

4. Press the clamp as shown.

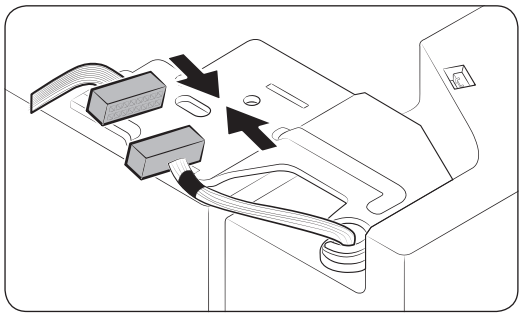

5. Connect the electrical harness.

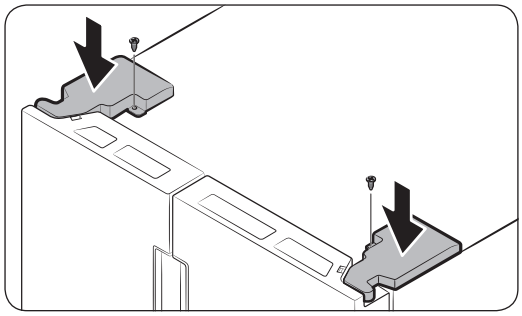

6. Insert the hinge covers with the front sides first, and then tighten the screws. Use a Phillips screwdriver for this step.

Untitled-2 46 2018-03-20 7:13:51

Operations

Feature panel

Type 1

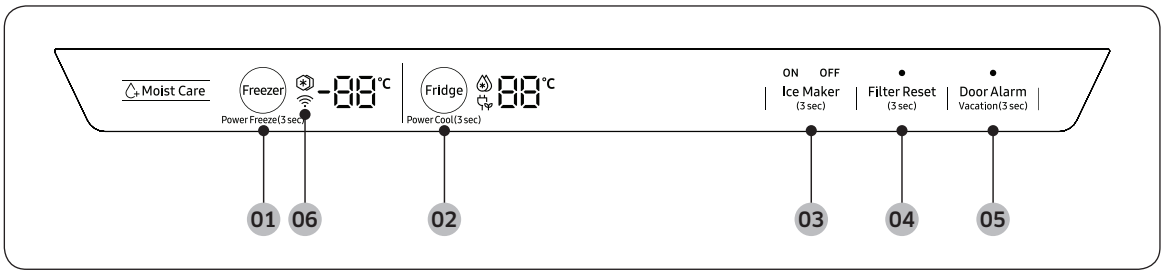

Type 2

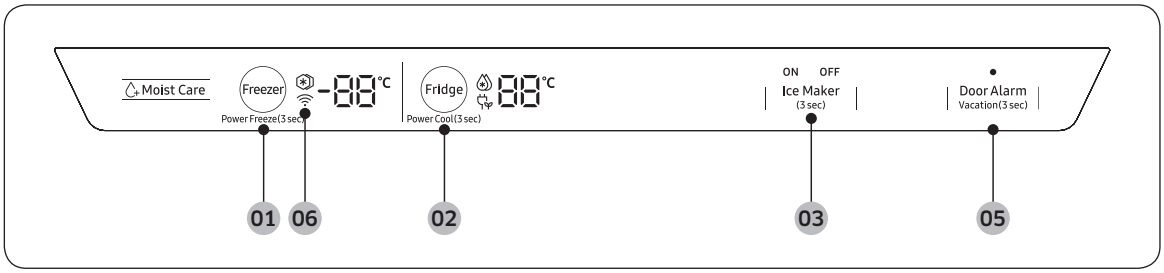

Type 3

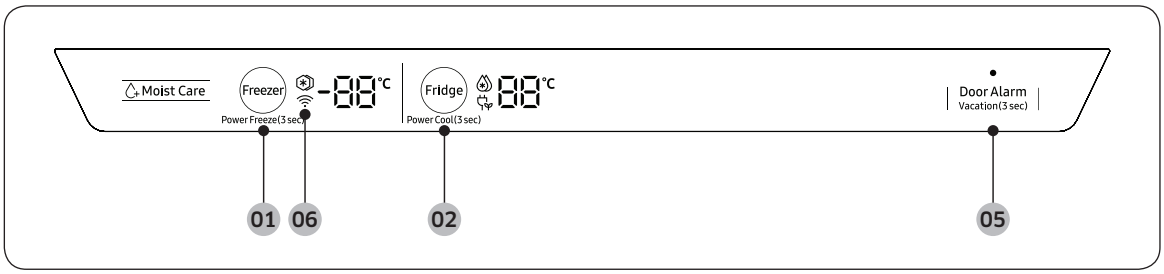

01 Freezer / Power Freeze

02 Fridge / Power Cool

03 Ice Maker *

04 Filter Reset *

05 Door Alarm / Vacation

06 Network connection

* Applicable models only

Untitled-2 47 2018-03-20 7:13:51

Operations

01 Freezer / Power Freeze (3 sec)

Freezer	The **Freezer** button can be used to set the freezer temperature, or to activate Power Freeze. Available temperatures are between -15 °C and -23 °C.
Power Freeze	Power Freeze speeds up the freezing process at maximum fan speed. The freezer keeps running at full speed for 50 hours and then returns to the previous temperature. • To activate Power Freeze, press and hold **Freezer** for 3 seconds. The corresponding indicator ( ) lights up, and the refrigerator will speed up the freezing process for you. • To deactivate, press and hold **Freezer** for 3 seconds again. The freezer returns to the previous temperature setting. • To freeze large amounts of food, activate Power Freeze for at least 20 hours before putting food in the freezer. **NOTE** Using Power Freeze increases power consumption. Make sure you turn it off and return to the previous temperature if you do not intend to use it.

02 Fridge / Power Cool (3 sec)

Fridge	The **Fridge** button can be used to set the fridge temperature, or to activate/deactivate Power Cool. You can manually adjust the cooling temperature for the fridge. Keep pressing **Fridge** to select a desired temperature between 1 °C and 7 °C.
Power Cool	Power Cool speeds up the cooling process at maximum fan speed. This is useful to quickly cool food that spoils quickly, or after the door is left open for some time. The fridge keeps running at full speed for several hours and then returns to the previous temperature. Press and hold **Fridge** for 3 seconds.

Untitled-2 48 2018-03-20 7:13:51

03 Ice Maker

Ice Maker	Press and hold **Ice Maker** for more than 3 seconds to turn the ice maker on or off. The ice maker has 2 indicators (ON/OFF) to indicate the operating status. • When the ice maker operates, the **ON** indicator turns on. • When the ice maker is turned off, the **OFF** indicator turns on. In this case, ice making is disabled even if you press the **Cubed Ice** or **Crushed Ice** buttons on the dispenser panel. To enable ice making, you must turn the ice maker on. • When the ice maker is off, pressing the dispenser lever for more than 5 seconds will automatically turn on the ice maker. • When you turn the ice maker off, you must wait at least 1 minute before you can turn it back on. **NOTE** If the ice maker is turned off, it will turn on if you press and hold the ice lever for more than 5 seconds.

Untitled-2 49 2018-03-20 7:13:51

04 Filter Reset (3 sec)

Filter Reset	After about 6 months (approximately 300 gallons) of using the original water filter, the Filter indicator turns red to remind you that the filter needs to be replaced. If this happens, replace the filter, and press and hold **Filter Reset** for 3 seconds. The filter indicator will be reset, and the Filter indicator turns off. **NOTE** Some regional areas have relatively large amounts of lime contained in the water. This may reduce the lifecycle of the filter. In these areas, you will have to replace the water filter more often than specified above.

05 Door Alarm / Vacation (3 sec)

Door Alarm	You can set the alarm for a reminder. If the door is left open for more than 2 minutes, the alarm will sound with the alarm indicator blinking. The alarm is enabled by factory default. To disable the alarm, press **Door Alarm**. To enable, press **Door Alarm** again.
Vacation	The **Vacation** button can be used to activate/deactivate Vacation mode. If you are going on vacation or a business trip, or if you do not intend to use the refrigerator for an extended time, use the Vacation feature. Press and hold **Vacation** for 3 seconds to turn off the fridge operation with the Vacation indicator ( ) on. **NOTE** It is strongly recommended to empty the fridge compartment and make sure the door is closed.

Untitled-2 50 2018-03-20 7:13:51

06 Network connection (applicable models only)

You can use the optional Smart Home Adapter (sold separately) to control and monitor your refrigerator through the SmartThings app. For more information about SmartThings, see the SmartThings section.

NOTE

- Recommended encryption systems include WPA/TKIP and WPA2/AES. Any newer or unstandardized Wi-Fi authentication protocols are not supported.
- Wireless networks may be affected by the surrounding wireless communication environment.
- If your Internet service provider has registered the MAC address of your PC or modem for identification, your Samsung Smart Refrigerator may fail to connect to the Internet. If this happens, contact your Internet service provider for technical assistance.
- The firewall settings of your network system may prevent your Samsung Smart Refrigerator from accessing the Internet. Contact your Internet service provider for technical assistance. If this symptom continues, contact a local Samsung service center or retailer.
- To configure the wireless access point (AP) settings, see the user manual of the AP.
- Samsung Smart Refrigerators featuring the Samsung Smart Home Adapter support both Wi-Fi 2.4 GHz with IEEE 802.11 b/g/n and Soft-AP protocols (IEEE 802.11 n is recommended).
- Unauthorized Wi-Fi wireless routers may fail to connect to applicable Samsung Smart Refrigerators.

Untitled-2 51 2018-03-20 7:13:51

Operations

SmartThings (available only with the optional adapter)

Installation

Visit the Google Play Store, Galaxy Apps, or Apple App Store and search for “SmartThings”. Download and install the SmartThings app provided by Samsung Electronics to your smart device.

NOTE

- The SmartThings app is designed for Android 6.0 (Marshmallow) or later, iOS 10.0 or later, iPhone 6 or later, and is optimized for Samsung smartphones (Galaxy S and Galaxy Note series).
- For improved performance, the SmartThings app is subject to change without notice, or discontinued support according to the manufacturer’s policy.

Samsung account

You are required to register with a Samsung account to use the app. If you don’t have a Samsung account, follow the app’s onscreen instructions to create a free Samsung account.

Getting started

1. Insert the Smart Home Adapter into the corresponding port of your refrigerator.
2. Run the SmartThings app and log in with your Samsung account. iPhone users are required to provide the login information each time they access the app.
3. Access **Add Device** and then tap **Refrigerator**.
4. Follow the onscreen instructions to provide the necessary information about the router, and then tap **Next**.
5. Press and hold **Fridge** for more than 5 seconds until the "AP" message appears on the display. Your refrigerator will be registered with the app.
6. When device registration is complete, the refrigerator icon will appear on the SmartThings app.
7. Tap the refrigerator icon to open the refrigerator page.
8. When a network connection is established, the Wi-Fi icon lights up on your refrigerator.

Refrigerator app

Integrated control

You can monitor and control your refrigerator at home as well as while on the move.

- Tap the refrigerator icon on the SmartThings to open the refrigerator page.
- Check the operation status or notifications for your refrigerator, and change options or settings if necessary.

NOTE

Some options or settings of the refrigerator may not be available for remote control.

Untitled-2 52 2018-03-20 7:13:51

Category	Item	Description
Monitoring	Fridge temperature	Displays the current temperature setting of the fridge.
	Freezer temperature	Displays the current temperature setting of the freezer.
	Diagnosis	Detects abnormal operations of the refrigerator.
	Energy monitoring	Checks the accumulated power consumption of the refrigerator for the last 180 days.
Functions	Ice making	You can turn the ice making function on or off, and check the current settings of the function.
		You can also check the status and progress of ice making.
	Power Cool	You can turn Power Cool on or off, and check the current settings.
	Power Freeze	You can turn Power Freeze on or off, and check the current settings.
Alarms	Abnormally high temperature	This alarm is triggered when the fridge or freezer has abnormally high temperatures.
	Door opening	This alarm is triggered if the fridge or freezer door is open for more than 2 minutes.
	Water filter replacement	This alarm reminds you that the water filter must be replaced.

Untitled-2 53 2018-03-20 7:13:52

Operations

Dispenser panel (applicable models only)

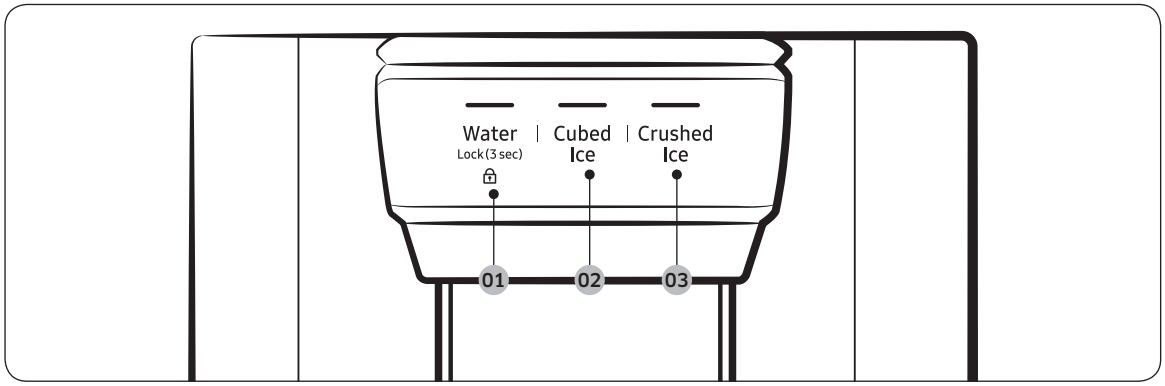

01 Water / Lock

02 Cubed Ice

03 Crushed Ice

01 Water / Lock (3 sec)

Water	To dispense chilled water, press **Water**. The corresponding indicator turns on.
Lock (Dispenser panel / Dispenser lever)	To prevent use of the dispenser panel buttons and the dispenser lever, press and hold **Water** for more than 3 seconds. If you press and hold the button again for more than 3 seconds, the dispenser lock will be deactivated. **NOTE** The **Lock** on the dispenser panel does not affect the controls on the main panel. To lock the main panel, use the Control Lock function on the main panel.

02 Cubed Ice

Cubed Ice	Press **Cubed Ice** to dispense cubed ice. The corresponding indicator turns on.

03 Crushed Ice

Crushed Ice	Press **Crushed Ice** to dispense crushed ice. The corresponding indicator turns on.

Untitled-2 54 2018-03-20 7:13:52

Special features

The refrigerator features user-oriented devices that you can use to benefit from.

Water/Ice dispenser (applicable models only)

Using the dispenser, you can dispense water with or without ice.

The water dispenser offers 3 options: chilled water, cubed ice, and crushed ice. To dispense chilled water, press **Water** on the dispenser panel. Put a water glass under the dispenser, and then push the dispenser lever.

To dispense water with ice

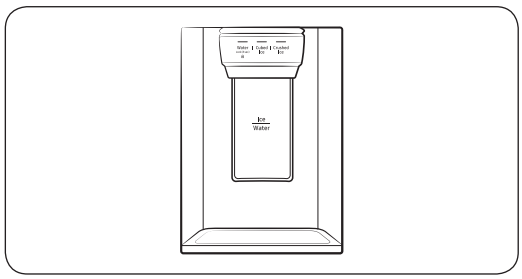

1. With the Ice Maker enabled, press **Cubed Ice** or **Crushed Ice** to select the ice type.
2. Put a water glass under the dispenser, and then push the **dispenser lever** with the glass. Ice will be dispensed from the dispenser.
3. Press **Water** to select water.
4. Push the **dispenser lever** with the glass. Water will be dispensed from the dispenser.

NOTE

- The dispenser will stop dispensing if you keep pushing the dispenser lever for about 1 minute. To dispense more water, release and push the lever again.
- Make sure the glass is in line with the dispenser to prevent the dispensed water from spilling out.
- If you do not use the water dispenser for 2-3 days, the dispensed water may have an abnormal smell or taste. This is not a system failure. Discard the first 1-2 glasses of water.

Ice maker (applicable models only)

The refrigerator has a built-in ice maker that automatically dispenses ice so that you can enjoy filtered water with cubed or crushed ice.

Ice making

After you have installed your refrigerator and plugged it in, follow these instructions to ensure proper ice making and to keep the ice bucket full of ice:

1. Let the refrigerator operate for at least 24 hours to ensure optimal performance.
2. Dispense the first 4 to 6 ice cubes into a glass.

Untitled-2 55 2018-03-20 7:13:52

Operations

3. Wait another 8 hours and dispense another 4 to 6 ice cubes.
4. Then, wait another 16 hours and dispense the first glass-full of ice.

NOTE

- If you consume all the ice at once, you must wait 8 hours before dispensing the first 4 to 6 cubes. This ensures that the ice bucket is filled with ice properly.
- Ice cubes generated rapidly may look white, which is normal.

To fill the water tank (applicable models only)

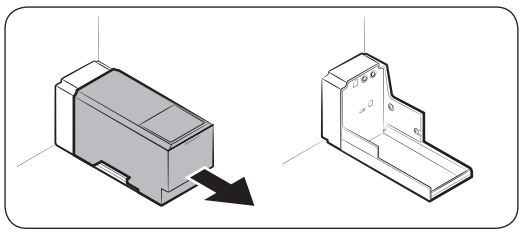

For first-time use, clean the inner side of the water tank and dry well.

1. Hold both handgrips on the front of the tank, and slide out as shown.

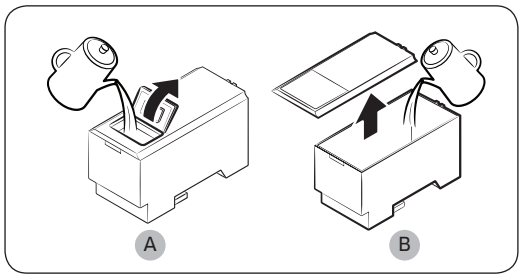

2. Open the **front lid (A)** of the cover or the **entire cover (B)** and fill the tank with a max of 5 litres water.

CAUTION

Do not exceed the max line. Water overflows.

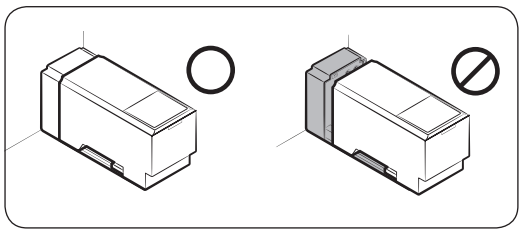

3. Reinsert the water tank and fit into the dispenser mechanism. Make sure the front side (with the front lid) of the tank faces to the front.

CAUTION

- Make sure the water tank fits into the shelf. Otherwise, the water tank may not operate properly.
- Do not use the refrigerator without inserting the water tank. This may decrease the cooling performance.
- Fill the tank only with potable water such as mineral or purified water. Do not use other liquid.
- Use caution when moving a filled tank. Physical injury may occur if the tank is dropped.

Untitled-2 56 2018-03-20 7:13:52

- Do not try to disassemble the internal pump yourself. If the internal pump is damaged or disconnected from the water tank, the dispenser does not operate.

For first-time use

- Push the dispenser lever for 10 seconds to emit air from the hoses of the water supply system.
- Discard the first six glasses of water to remove impurities in the water supply system.

Ice making (applicable models only)

The refrigerator has a built-in ice maker that automatically dispenses ice so that you can enjoy filtered water with cubed or crushed ice to your preference.

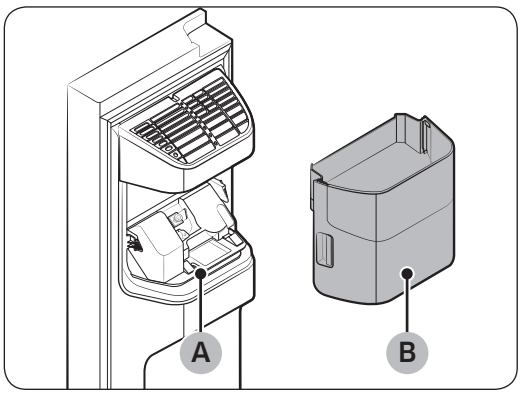

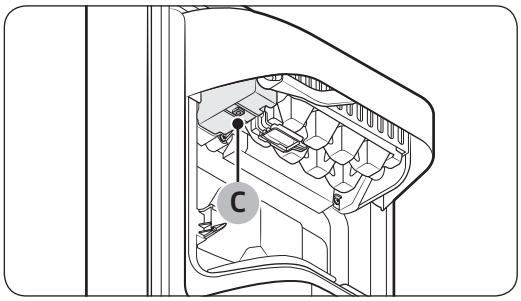

If ice does not dispense, first check the ice maker if it makes ice properly.

To check the ice maker

1. Gently hold the icemaker bucket (B) with both hands and remove it from the ice chute (A).
2. Check the icemaker bucket if it contains ice as appropriate.
3. Press the button (C) on the bottom of the ice maker. You will hear a chime (ding-dong) at the press of the button.
4. You will hear another chime if the ice maker operates properly.

NOTE

If this symptom continues, contact the water line installer or a local Samsung service centre.

CAUTION

- Do not press the button repeatedly after the ice tray is filled with ice or water. Water may overflow or ice may be jammed.
- When the refrigerator recovers power supply after a power failure, the icemaker bucket may contain a mix of melted and jammed ice cubes, resulting in a system failure. To prevent this, make sure to empty the icemaker bucket before using the refrigerator.

Untitled-2 57 2018-03-20 7:13:53

- To prevent dropping the icemaker bucket, make sure to use both hands when removing or reinserting the icemaker bucket.
- Do not let children hang on or play with the ice dispenser or the icemaker bucket. Children may get hurt.
- Do not put fingers or other objects into the dispenser hole or the ice chute. This may cause physical injury or property damage.

NOTE

- If you remove the icemaker bucket, the Ice Maker ON indicator will blink.
- Removal of the icemaker bucket does not affect the thermal and mechanical performance of the refrigerator.
- The declared freezer volume is measured with the freezer guide and the bottom shelf, after removing the ice maker, upper and lower drawers.

Untitled-2 58 2018-03-20 7:13:53

To secure more storage space (applicable models only)

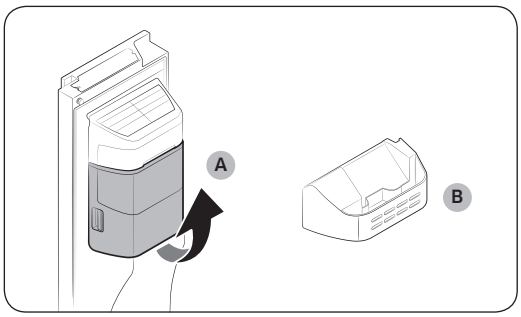

If you do not use the ice maker and need more storage space, remove the **icemaker bucket (A)**. Then, insert the **Freezer guide (Optional) (B)** into the icemaker bucket's place.

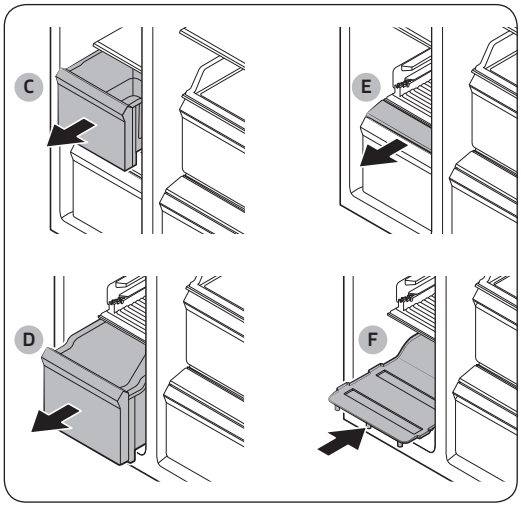

To secure more space, remove the **upper drawer (C)**, **lower drawer (D)**, and **lower drawer cover (E)**. Then, insert the provided **bottom shelf (F)**.

NOTE

- Removing the drawers does not affect the temperature or usage of the freezer.
- The declared freezer volume is measured with the bottom shelf, after removing the upper drawer, lower drawer, and lower drawer cover.

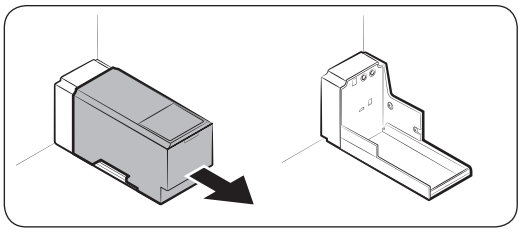

For more space, remove the water tank and use the space to store more items.

Operations

Untitled-2 59 2018-03-20 7:13:53

Operations

Icemaker bucket

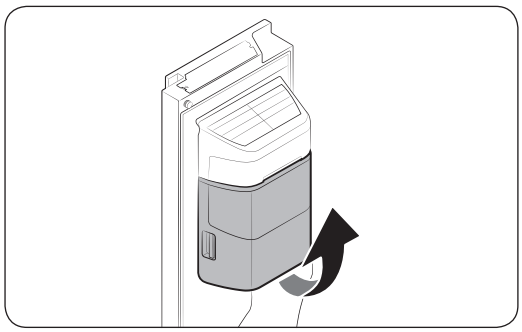

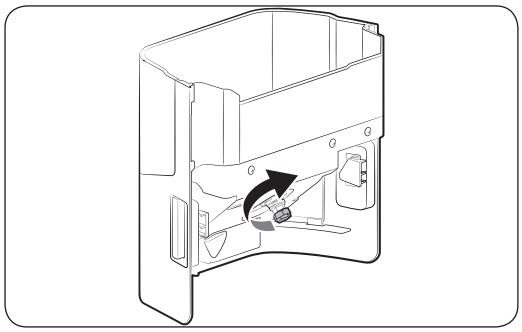

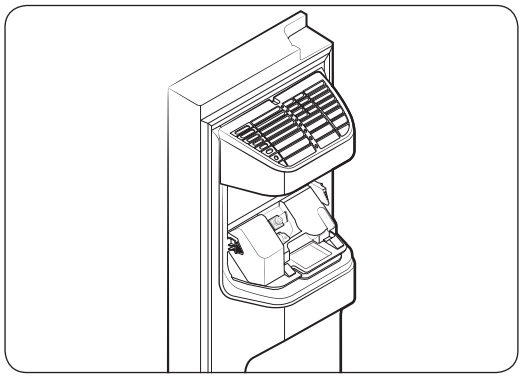

If you do not dispense ice for an extended period, ice may form clumps inside the bucket. If this happens, remove and empty the icemaker bucket.

1. To remove the icemaker bucket, gently lift it up and pull out slowly while holding the handgrips with both hands.
2. Remove and empty the icemaker bucket.
3. When done, turn the gear handle on the rear of the bucket by 90°, and then put the bucket back into position. Make sure the bucket is inserted properly until you hear a clicking sound.
4. Press and hold **Ice Maker** for 3 seconds to reset the ice maker.

⚠ CAUTION

- Do not apply excessive force to the bucket cover. The cover may break.
- Do not close the door hard. Water may spill over the ice maker.
- To prevent injury, make sure to clean up any ice or water that has fallen on the floor.
- To prevent accidents or injury, do not let children play with the water dispenser or the ice maker.
- Do not put your hand or an object into the ice chute. This may cause physical injury or product damage.

NOTE

- If the Ice Maker ON indicator blinks, remove and reinsert the icemaker bucket. Make sure it is reinserted properly.
- Any sound from the ice maker is normal, which outputs during the ice making process.

Untitled-2 60 2018-03-20 7:13:53

- While the door is open, neither the ice maker nor the water dispenser operates.

Water pressure

If you want to check how much water flows into the ice tray, follow these steps.

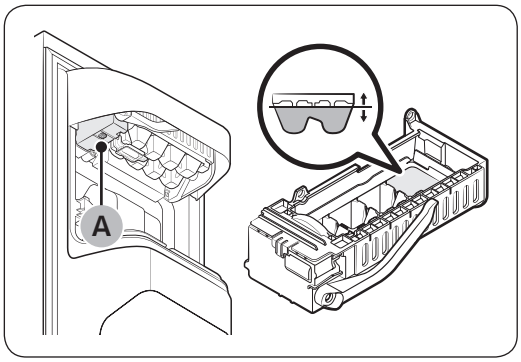

1. Remove the ice bucket.
2. Press the **button (A)** on the bottom of the ice maker. Normally, the ice tray fills with water in a few minutes.
3. If the water level is lower than expected, check the water pressure of the water supply line from the water source. This is not a system failure.

⚠ **CAUTION**

- Do not repeatedly press the button on the bottom of the ice maker when the tray is filled with water. Water may overflow or ice may be jammed.
- Make sure the icemaker bucket is inserted properly. Otherwise, the ice maker will not operate.
- If there is a power failure, remove the ice tray. Water may flow.

Untitled-2 61 2018-03-20 7:13:53

Maintenance

Handle and care

Shelves (fridge/freezer)

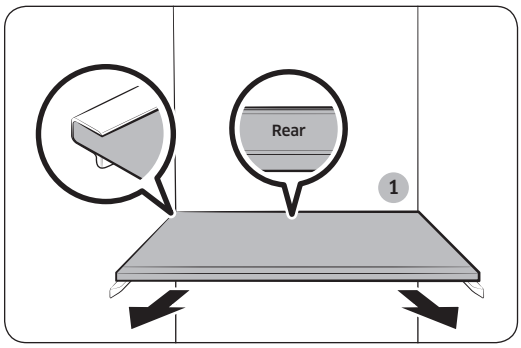

- To remove a shelf, fully open the corresponding door. Hold the front of the shelf and gently lift up and slide out.
- If the door cannot fully open, slide out the shelf half way to the front and turn it over to remove.

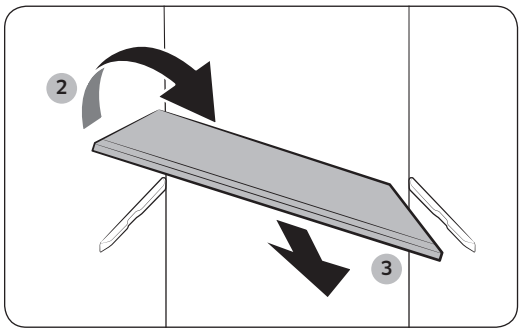

⚠ **CAUTION**

- The shelf must be inserted correctly. Do not insert upside down.
- Glass containers may scratch the surface of glass shelves.
- Do not insert a shelf in the wine rack position. This may damage the refrigerator. (applicable models only)

Door bins

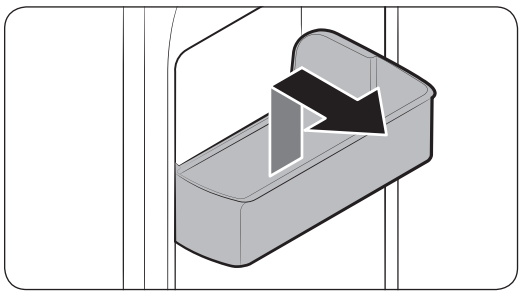

To remove a door bin, hold the front sides of the bin and gently lift up to remove.

Untitled-2 62 2018-03-20 7:13:54

Drawers

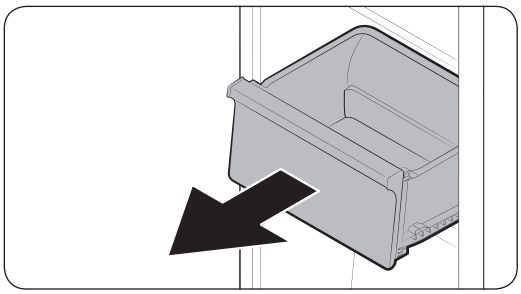

Gently lift up the front of the drawer and slide out.

Vegetable / Dry drawers

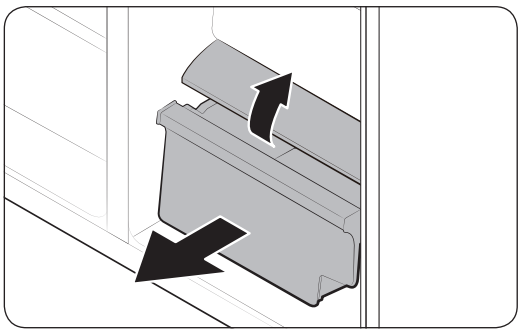

To remove the vegetable drawer from the fridge or the dry drawer from the freezer.

1. First, remove surrounding multipurpose drawers if necessary.

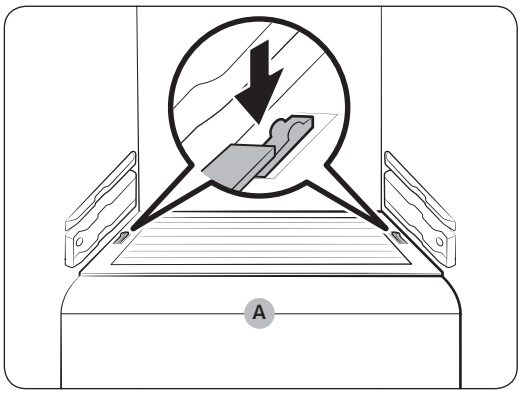

2. If your refrigerator is provided with a cover (A) for the vegetable/dry drawer, remove the cover. For this, slide out the cover while holding down the clips on either side of the cover.
3. Gently pull out the vegetable/dry drawer.

Icemaker bucket

To remove the ice maker bucket, see the Icemaker bucket section on page 60.

Untitled-2 63 2018-03-20 7:13:54

Maintenance

Cleaning

Interior and exterior

⚠ **WARNING**

- Do not use benzene, thinner, or home/car detergent such as Clorox™ for cleaning purposes. They may damage the surface of the refrigerator and cause a fire.
- Do not spray water onto the refrigerator. This may cause electric shock.
- Do not put fingers or other objects into the dispenser hole.

Regularly use a dry cloth to remove all foreign substances such as dust or water from the power plug terminals and contact points.

1. Unplug the power cord.
2. Use a moistened, soft, lint-free cloth or paper towel to clean the refrigerator's interior and exterior.
3. When done, use a dry cloth or paper towel to dry well.
4. Plug in the power cord.

Ice / Water dispenser (applicable models only)

NOTE

For hygienic purposes, frequently clean the dispenser area.

⚠ **CAUTION**

When crushed ice is selected, some residual ice chips may collect in the ice chute. To prevent this, remove the residual ice from the chute using a soft, clean cloth.

Rubber seals

If the rubber seals of a door become dirty, the door may not close properly and reducing refrigerator performance and efficiency. Use a mild detergent and damp cloth to clean the rubber seals. Then, dry well with a cloth.

Rear panel

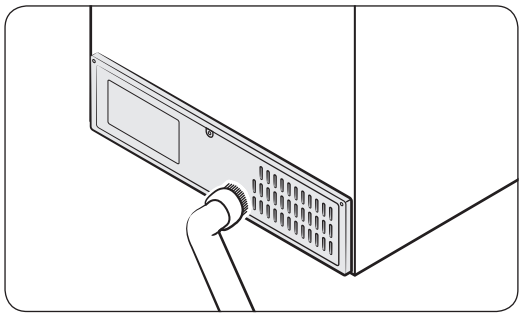

To keep cords and exposed parts of the rear panel free of dirt, vacuum the panel once or twice a year.

Untitled-2 64 2018-03-20 7:13:54

⚠ **CAUTION**

Do not remove the rear **panel cover**. Electric shock may occur.

Replacement

Lamps

The lamps are not user-serviceable. To replace the lamps of the refrigerator, contact a local Samsung service centre.

Untitled-2 65 2018-03-20 7:13:54

Troubleshooting

Before calling for service, review the checkpoints below. Any service calls regarding normal situations (No Defect Cases) will be charged to users.

General

Temperature

Symptom	Possible causes	Solution
Fridge/freezer does not operate. Fridge/freezer temperature is warm.	• Power cord is not plugged in properly.	• Properly plug in the power cord.
	• Temperature control is not set correctly.	• Set the temperature lower.
	• Refrigerator is located near a heat source or direct sunlight.	• Keep the refrigerator away from direct sunlight or a heat source.
	• Not enough clearance between refrigerator and nearby walls or cabinets.	• Make sure there is a gap of at least 5 cm between the refrigerator back and sides and any nearby walls or cabinets.
	• The refrigerator is overloaded. Food is blocking the refrigerator vents.	• Do not overload the refrigerator. Do not allow food to block vents.
Fridge/freezer is over-cooling.	• Temperature control is not set correctly.	• Set the temperature higher.
Interior wall is hot.	• Refrigerator has heat-proof piping in the interior wall.	• To prevent condensation from forming, the refrigerator has heat-proof piping in the front corners. If the ambient temperature rises, this equipment may not work effectively. This is not a system failure. 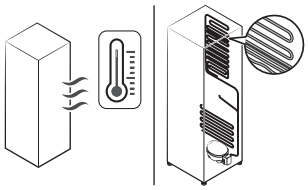

Troubleshooting

Untitled-2 66 2018-03-20 7:13:55

Odour

Symptom	Possible causes	Solution
Refrigerator has odours.	• Spoiled food.	• Clean the refrigerator and remove any spoiled food.
	• Food with strong odours.	• Make sure strong smelling food is wrapped airtight.

Frost

Symptom	Possible causes	Solution
Frost around the vents.	• Food is blocking the vents.	• Make sure no food blocks the refrigerator vents.
Frost on interior walls.	• Door is not closed properly.	• Make sure food does not block the door. Clean the door gasket.

Condensation

Symptom	Possible causes	Solution
Condensation forms on the interior walls.	• If door is left open, moisture enters the refrigerator.	• Remove the moisture and do not leave a door open for extended periods of time.
	• Food with high moisture content.	• Make sure food is wrapped airtight.

Water/ice (dispenser models only)

Symptom	Possible causes	Solution
Water flow is weaker than normal.	• Water pressure is too low.	• Make sure the water pressure is between 20 to 120 psi.
Ice maker makes a buzzing sound.	• The ice maker function is activated, but the water supply to the refrigerator has not been connected.	• Turn off the Ice maker.

Untitled-2 67 2018-03-20 7:13:55

Troubleshooting

Symptom	Possible causes	Solution
Ice maker does not make ice.	• Ice maker has just been installed.	• You must wait for 12 hours for the refrigerator to make ice.
	• Freezer temperature is too high.	• Set the freezer temperature below -18 °C (0 °F) or -20 °C (-4 °F) in warm ambient air.
	• Dispenser panel Lock is activated.	• Deactivate dispenser panel Lock.
	• Ice maker is off.	• Turn on the ice maker.
Ice does not dispense.	• Ice may jam if the ice dispenser is not used for a long time (approx. 3 weeks).	• If you won't be using the refrigerator for a long time, empty the ice bucket and turn off the ice maker.
	• Ice bucket is not properly inserted.	• Make sure the ice bucket is properly inserted.
	• Water line is not connected properly or water supply is not on.	• Check if the water line is installed correctly. Check if the water line stop cock is closed. 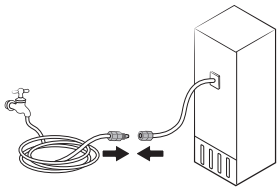

Troubleshooting

Untitled-2 68 2018-03-20 7:13:55

Symptom	Possible causes	Solution
Water does not dispense.	• Water line is not connected properly or water supply is not on.	• Check if the water line is installed correctly. Check if the water line stop cock is closed. 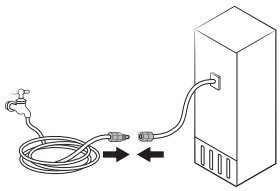
	• Dispenser panel Lock is activated.	• Deactivate dispenser panel Lock.
	• A third-party water filter was installed.	• Use only Samsung-provided or approved filters. • Unapproved filters may leak and damage the refrigerator.

Untitled-2 69 2018-03-20 7:13:55

Troubleshooting

Do you hear abnormal sounds from the refrigerator?

Before calling for service, review the checkpoints below. Any service calls related to normal sounds will be charged to the user.

These sounds are normal.

- When starting or ending an operation, the refrigerator may make sounds similar to a car engine igniting. As the operation stabilizes, the sounds will decrease.

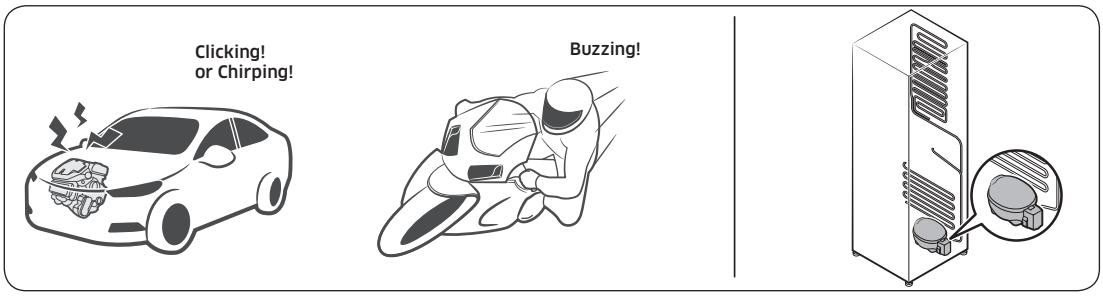

- While the fan is operating, these sounds may occur. When the refrigerator reaches the set temperature, no fan sound will occur.

- During a defrost cycle, water may drip on the defrost heater, causing sizzling sounds.

Untitled-2 70 2018-03-20 7:13:55

- As the refrigerator cools or freezes, refrigerant gas moves through sealed pipes, causing bubbling sounds.

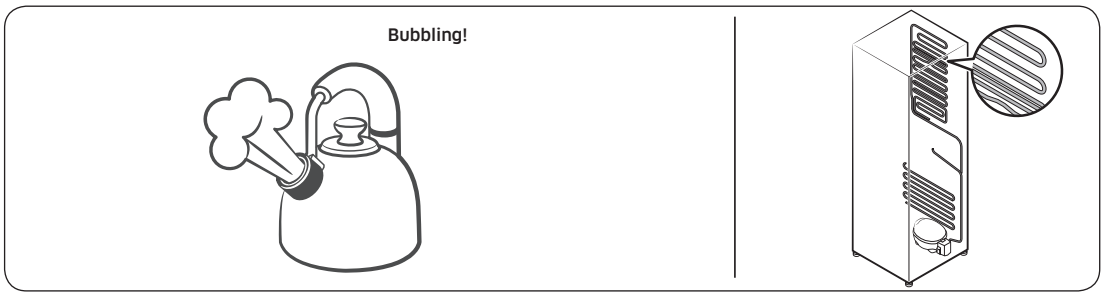

- As the refrigerator temperature increases or decreases, plastic parts contract and expand, creating knocking noises. These noises occur during the defrosting cycle or when electronic parts are working.

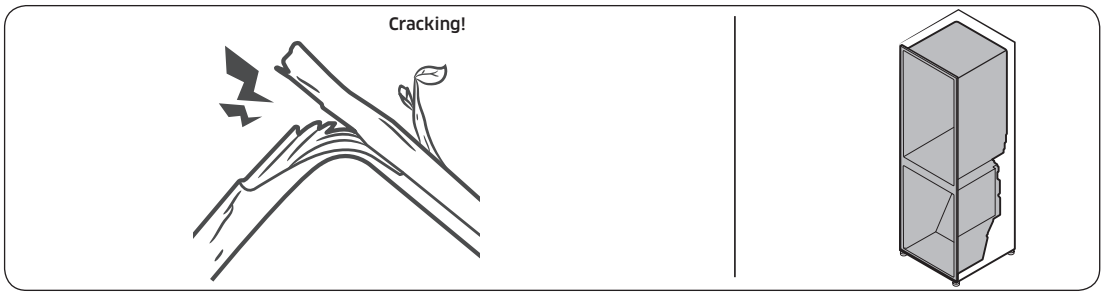

- For ice maker models: When the water valve opens to fill the ice maker, buzzing sounds may occur.
- Due to pressure equalizing when opening and closing the refrigerator door, whooshing sounds may occur.

Untitled-2 71 2018-03-20 7:13:55

Troubleshooting

SmartThings

Symptom	Action
Could not find “SmartThings” in the app market.	• The SmartThings app is designed for Android 6.0 (Marshmallow) or later, iOS 10.0 or later, iPhone 6 or later, and is optimized for Samsung smartphones (Galaxy S and Galaxy Note series).
The SmartThings app fails to operate.	• The SmartThings app is available for applicable models only. • The old Samsung Smart Refrigerator app cannot connect with SmartThings models.
The SmartThings app is installed but is not connected to my refrigerator.	• You must log into your Samsung account to use the app. • Make sure that your router is operating normally. • Make sure that the Smart Home Adapter is inserted properly. • If the Wi-Fi icon on the refrigerator’s display is off, this indicates that no network connection has been established yet. In this case, use the SmartThings app to connect and register your refrigerator to the access point (AP/Router) in your home.
Could not log into the app.	• You must log into your Samsung account to use the app. • If you don’t have a Samsung account, follow the app’s onscreen instructions to create one.
An information message appears when I try to register my refrigerator.	• Network connection may fail due to the distance from your access point (AP) or electrical interference from the surrounding environment. Wait a moment and try again.
The SmartThings app is successfully connected to my refrigerator but does not run.	• Exit and restart the SmartThings app or disconnect and reconnect the router. • Remove the Smart Home Adapter, and reconnect it properly. Then, try again.

Untitled-2 72 2018-03-20 7:13:55

Memo

Memo

Memo

SAMSUNG

Contact SAMSUNG WORLD WIDE

If you have any questions or comments relating to Samsung products, please contact the SAMSUNG customer care center.

Country	Contact Center	Web Site
UK	0330 SAMSUNG (7267864)	www.samsung.com/uk/support
IRELAND (EIRE)	0818 717100	www.samsung.com/ie/support

DA68-03725A-01