Blomberg®
seit 1883

Dishwasher
User manual

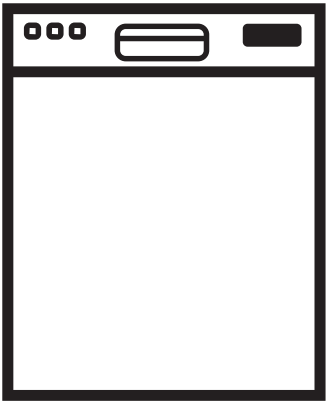

LDF42240W
LDF42240B

Dishwasher

User manual

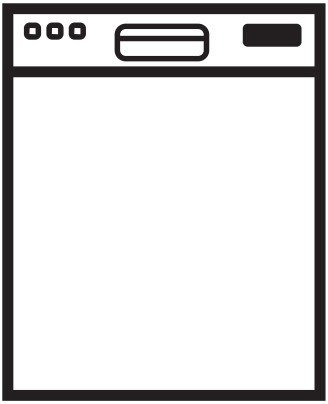

LDF42240W
LDF42240B

Please read this user manual first!

Dear Customer,

We hope that you get the best results from your product which has been manufactured with high quality and state-of-the-art technology. Therefore, please read this entire user manual and all other accompanying documents carefully before using the product and keep it as a reference for future use.
If you handover the product to someone else, give the user manual as well.
Follow all warnings and information in the user manual.
Remember that this user manual is also applicable for several other models. Differences between models will be identified in the manual.

Explanation of symbols

Throughout this User Manual the following symbols are used:

	Important information or useful hints about usage.
	Warning for hazardous situations with regard to life and property.
	Warning for electric shock.
	Packaging materials of the product are manufactured from recyclable materials in accordance with our National Environment Regulations.

Do not dispose of the packaging materials together with the domestic or other wastes. Take them to the packaging material collection points designated by the local authorities.

CONTENTS

1 INSTRUCTIONS FOR SAFETY AND ENVIRONMENT 4

General safety 4
Intended use....5
Children's safety 5
Disposing of packaging material....5
Transportation of the product 5
Compliance with WEEE Directive and Disposing of the Waste Product 6
Compliance with RoHS Directive....6
Package information....6

2 DISHWASHER 7

Overview....7
Fan drying system 8
Technical specifications 8

3 INSTALLATION 9

Appropriate installation location....9
Connecting water supply 9
Connection to the drain 10
Adjusting the feet....10
Electrical connection....10
This appliance must be earthed 11
Fitting a different plug 11
Initial use 11

4 PREPARATION 12

Tips for energy saving 12
Water softening system 12
Adjusting the water softening system13
Detergent....15
Tablet detergents 16
Rinse aid....17
Items not suitable for washing in the dishwasher 18
Placing the dishes into the dishwasher 18
Adjusting the height of the upper basket....21
Collapsible upper basket wires....22
Upper basket multipurpose service rack....22
Collapsible lower basket tines 23
Cutlery basket 23
Upper basket height adjustable rack 24
Tray Wash Supports 24

5 OPERATING THE PRODUCT25

Keys....26
Preparing the machine 26
Programme selection....26
Auxiliary functions....28
Programming the washing time 29
Cancelling the programme 31
Adjusting the amount of rinse aid 31
ProClean....32
End of programme....32
Overflowing warning 32

6 MAINTENANCE AND CLEANING 33

Cleaning the outer surface of the product....33
Cleaning the interior of the machine.33
Cleaning the filters....33
Cleaning the hose filter....34
Cleaning the impellers 35
Lower impeller 35
Upper impeller 35

7 TROUBLESHOOTING 36

8 GUARANTEE 41

Guarantee Details....41

1 Instructions for safety and envIronment

This section contains safety instructions that will help to give protection from risk of personal injury or property damage. Failure to follow these instructions shall void all warranties.

General safety

- Never place the product on a carpet-covered floor; otherwise, lack of airflow beneath the product will cause electrical parts to overheat. This will cause problems with your product.
- Do not operate the product if the power cable / plug is damaged! Call the Authorised Service Agent.
- Connect the product to a grounded outlet protected by a fuse complying with the values in the “Technical specifications” table. Do not neglect to have the grounding installation made by a qualified electrician. Our company shall not be liable for any damages that will arise when the product is used without grounding in accordance with the local regulations.
- The water supply and draining hoses must be securely fastened and remain undamaged.
- Unplug the product when not in use.
- Never wash the product by spreading or pouring water onto it! There is the risk of electric shock!
- Never touch the plug with wet hands! Never unplug by pulling on the cable, always pull out by grabbing the plug.
- The product must be unplugged during installation, maintenance, cleaning and repairing procedures.
- Always have the repair procedures carried out by the Authorised Service Agent. Manufacturer shall not be held liable for damages that may arise from procedures carried out by unauthorised persons.
- Never use chemical solvents in the product. They bring forth the risk of explosion.
- When you pull the upper and lower baskets out completely, the door of the product will bear all the weight of the baskets. Do not put other loads on the door; otherwise, the product may tilt.
- Never leave the door of the product open apart from loading and unloading procedures.
- Do not to open the door of the product when it is running unless necessary. Be careful for the rush of hot steam when you need to open the door.

Intended use

- This product has been designed for domestic use.
- It must be used to do the domestic type dishes only.
- This appliance is intended to be used in household and similar applications such as:

- Staff kitchen areas in shops, offices and other working environments.

- Only dishwasher safe detergents, rinse aids and additives must be used.
- The manufacturer waives any responsibility arisen from incorrect usage or transportation.
- This appliance can be used by children aged from 8 years and above and persons with reduced physical,sensory or mental capabilities or lack of experience and knowledge if they have been given supervision or instruction concerning use of the appliance in a safe way and understand the hazards involved. Children shall not play with the appliance. Cleaning and user maintenance shall not be made by children without supervision.

Children's safety

- Electrical products are dangerous for the children. Keep children away from the product when it is in use. Do not let them to tamper with the product.
- Do not forget to close the door of the product when leaving the room where it is located.
- Store all detergents and additives in a safe place away from the reach of the children.

Disposing of packaging material

Packaging materials are dangerous to children. Keep packaging materials in a safe place away from reach of the children.
Packaging materials of the product are manufactured from recyclable materials. Dispose of them properly and sort in accordance with recycled waste instructions. Do not dispose of them with normal domestic waste.

Transportation of the product

⚠	If you need to move the product, do it in upright position and hold from the rear side. Tilting the product onto its front side may cause the electronic parts in it get wet and damaged.

1. Unplug the product before transporting it.
2. Remove water drainage and water supply connections.
3. Drain the remaining water in the product completely.

Compliance with WEEE Directive and Disposing of the Waste Product

This product complies with EU WEEE Directive (2012/19/EU). This product bears a classification symbol for waste electrical and electronic equipment (WEEE).This product has been manufactured with high quality parts and materials which can be reused and are suitable for recycling. Do not dispose of the waste product with normal domestic and other wastes at the end of its service life. Take it to the collection center for the recycling of electrical and electronic equipment. Please consult your local authorities to learn about these collection centers.

Compliance with RoHS Directive

The product you have purchased complies with EU RoHS Directive (2011/65/EU). It does not contain harmful and prohibited materials specified in the Directive.

Package information

Packaging materials of the product are manufactured from recyclable materials in accordance with our National Environment Regulations. Do not dispose of the packaging materials together with the domestic or other wastes. Take them to the packaging material collection points designated by the local authorities.

2 Dishwasher

Overview

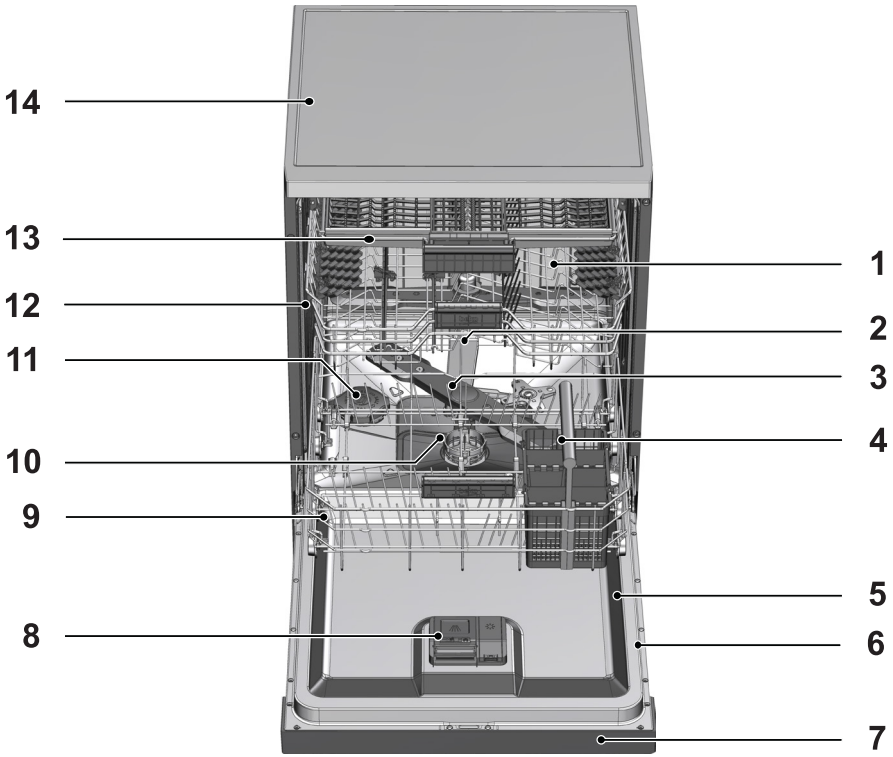

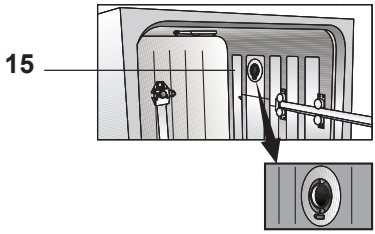

1. Upper basket
2. Upper impeller
3. Lower impeller
4. Silverware basket
5. Door
6. Rating Label
7. Control panel
8. Detergent dispenser
9. Lower basket
10. Filters
11. Salt reservoir lid
12. Upper basket rail
13. Upper cutlery basket (depends on model)
14. Tabletop (depends on model)
15. Fan drying system (depends on model)

Technical specifications

Compliance to standards and test data / EC declaration of conformity
This product complies with the following EU directives;
Development, production and sales stages of this product comply with the safety rules included in all pertaining European Community regulations.
2014/35/EU, 2014/30/EU, 93/68/EC, IEC 60436/DIN 44990, EN 50242

Power input	220-240 V, 50 Hz (see rating label)
Total power consumption	1800-2100 W (see rating label)
Heater power consumption	1800 W (see rating label)
Total current (depends on the model)	10 A (see rating label)
Drain pump power consumption	30 W (see rating label)
Water pressure	0.3 –10 bar (= 3 – 100 N/cm² = 0.01-1.0 Mpa)

Technical specifications may be changed without prior notice to improve the quality of the product.

Figures in this manual are schematic and may not match the product exactly.

Values stated on the markings of the product or in the printed documents accompanying the product are obtained in the laboratory on basis of the relevant standards. Depending on operational and environmental conditions of the product, these values may vary.

Fan drying system

Fan drying system ensures efficient drying of your dishes.
It is normal to hear a different sound than that of washing cycle during fan operation.

Note for test institutions:
Data required for performance tests shall be provided upon request. Requests can be e-mailed to the following address:
standart.test@blomberginternational.com
Do not forget to provide the code, stock and serial numbers of the product to be tested in your request e-mail along with your contact information. Code, stock and serial numbers of the product may be found on the type label attached to the side wall of the door.

3 Installation

To make the product ready for use, make sure that the electricity, tap water supply and water drainage systems are appropriate before calling the Authorised Service Agent. If they are not, call a qualified technician and plumber to have any necessary arrangements carried out.

	Preparation of the location and electrical, tap water and waste water installations at the place of installation is under customer's responsibility.
	Manufacturer shall not be held responsible for damages arising from processes carried out by unauthorised persons.
	Prior to installation, visually check if the product has any defects on it. If so, do not have it installed. Damaged products cause risks for your safety.
	Make sure that the water inlet and discharge hoses are not folded, pinched or crushed while pushing the product into its place after installation or cleaning procedures.

When placing the product, pay attention not to damage the floor, walls, piping, etc. Do not hold the product from its door or panel to move it.

Appropriate installation location

- Place the product on a solid and flat floor that has sufficient load carrying capacity! The product must be installed on a flat surface in order for the door to be closed comfortably and securely.
- Do not install the product at places where temperature may fall below 0ºC.
- Place the product on a rigid floor. Do not place it on a long pile rug or similar surfaces.

	Ensure the power cable does not get trapped under the product.

- Make sure that you select a location that will allow you to load and unload the dishes in a fast and comfortable manner.
- Install the product in a place close to the tap and the drain. Select the installation location by considering that it will not be changed after the connections are made.

Connecting water supply

- Do not use old or used water inlet hose on the new product. Use the new water inlet hose supplied with the product.
- Connect the water inlet hose directly to the cold water tap. Permitted water temperature up to 25°C. Pressure coming from the tap should be minimum 0.3 and maximum 10 bars. If the water pressure exceeds 10 bars, a pressure relief valve should be installed in between.
- Open the tap completely after making the connections to check for water leaks.

For your safety, close the water inlet tap completely after the washing programme is over.

Connection to the drain

Water discharge hose can directly be connected to the drain hole or sink's drainage. The length of this connection must be min. 50 cm and max. 100 cm from the floor. A discharge hose longer than 4 meters will cause washing performance to be affected.Attach the water discharge hose to the drainpipe without bending it. Tightly fix the water discharge hose to the drainpipe in order to prevent any dislocation of the water discharge hose during operation of the product.

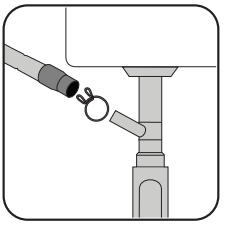

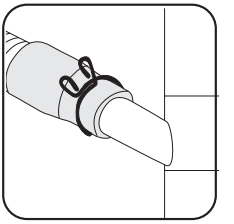

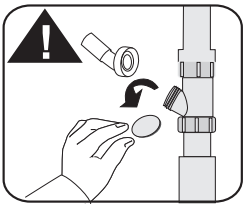

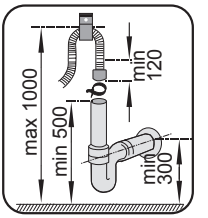

Drainpipe must be connected to the foul water system and it should not be connected to any surface water drain.

Adjusting the feet

If the door of the product cannot be closed properly or if the product wobbles when you push it slightly, then you need to adjust the feet of the product. Adjust the feet of the product as illustrated in the relevant section.

Electrical connection

Before you insert the plug into the wall socket make sure that the voltage and the frequency shown in the rating label corresponds to your electricity supply.

We recommend that this appliance be connected to the mains supply via a suitable switched and fused socket in a readily accessible position.

If the supply cord or the mains lead is damaged please do not replace it yourself. The supply cord or the mains lead must be replaced by a Authorised Service Agent or a similarly qualified person.

This appliance must be earthed

If the fitted moulded plug is not suitable for your socket, then the plug should be cut off and an appropriate plug fitted.
Destroy the old plug, which is cut off as a plug with a bared cord could cause a shock hazard if inserted into a socket elsewhere in the house.
The moulded plug on this appliance incorporates a 13A fuse. Should the fuse need to be replaced an ASTA approved BS1362 fuse of the same rating must be used. Do not forget to refit the fuse cover. In the event of losing the fuse cover, the plug must not be used until a replacement fuse cover has been fitted. Colour of the replacement fuse cover must be the same colour as that visible on the pin face of the plug. Fuse covers are available from any good electrical store.

Fitting a different plug

As the colours of the wires in the mains lead of this appliance may not correspond with the coloured markings identifying the terminals on your plug, proceed as follows:

1. Connect the green - yellow or green (earth) wire to the terminal in the plug marked ‘E’ or with the symbol ⏚ or coloured green and yellow or green.
2. Connect the blue (neutral) wire to the terminal in the plug marked ‘N’ or coloured black.
3. Connect the brown (live) wire to the terminal in the plug marked ‘L’ or coloured red.

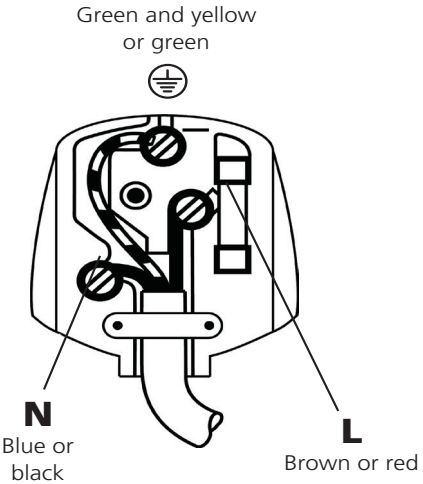

With the alternative plugs a 13A fuse must be fitted either in the plug or adaptor or in the main fuse box. If in doubt contact a qualified electrician.

Initial use

Before starting to use the product, make sure that all preparations are made in accordance with the instructions in sections “Important safety instructions” and “Installation”.

- Before using the product, fill the salt reservoir with 1 litre of water, add salt (see next page) and stir to dissolve. Run the Dishwasher without dishes on a short programme with a small amount of detergent.

There might be a small amount of water left in the product after factory quality control tests. This causes no harm to the product.

4 Preparation

Tips for energy saving

Following information will help you use the product in an ecological and energy-efficient manner.
Wipe away any coarse food remnants on the dishes before putting them in the product.
Operate the product after filling it completely.
When selecting a programme, consider the table of "Programme data and average consumption values".
Do not put more detergent than suggested on the detergent package.

Water softening system

The product is equipped with a water softening system which reduces the hardness of incoming water. This system softens the supply water to a level that will allow washing the dishes with the required quality.

i	The mains water hardness must be softened if it is over 7°dH. Otherwise, hardness ions will accumulate on the dishes that are washed and may affect the washing, rinsing and drying performances of the machine.

Adjusting the water softening system

Cleaning, rinsing and drying performance of your dishwasher will increase when water softening system is adjusted properly.
Adjust the new water hardness level according to the Water hardness level instruction in this booklet.
Use the test strip supplied with the product according to the steps given below to determine hardness level of your supply water.

a	b	c	d	e	f
		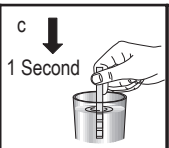	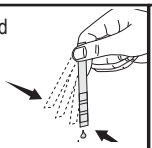	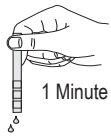	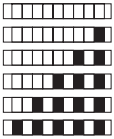
Remove the test strip from the packet.	Turn on the tap and let the water run for about a minute.	Hold the test strip in the water for about a second.	Remove the test strip from the water and shake it.	Wait for 1 minute.	The test strip shows you the hardness level.

After determining hardness level of the supply water:
1. Turn on the machine, press Time Delay and P+/P keys simultaneously. After the countdown (3,2,1) is displayed keep the keys pressed for a while.
2. Press P+/P key to activate the (r..) position.
3. Using Time Delay key, adjust water hardness level according to the hardness of the supply water. See “Water hardness level adjustment table” for correct setting.
4. Press On / Off key to save the setting.

Water hardness level adjustment table

Hardness Level	English Water Hardness °dE	German Water Hardness °dH	French Water Hardness °dF	Water Hardness Level Indicator
0th Level	0-5	0-4	0-8	Press the Time Delay key to switch the water hardness level to position 1. (r1)
1st Level	6-9	5-7	9-13	
2nd Level	10-15	8-12	14-22	Press the Time Delay key to switch the water hardness level to position 2. (r2)
3rd Level	16-19	13-15	23-27	Press the Time Delay key to switch the water hardness level to position 3. (r3)
4th Level	20-24	16-19	28-34	Press the Time Delay key to switch the water hardness level to position 4. (r4)
5th Level	25-62	20-50	35-90	Press the Time Delay key to switch the water hardness level to position 5. (r5)

If the hardness level of the supply water is above 90 °dF or if you are using well water, then it is recommended to use water purification devices and special filters.
If the hardness level of the supply water is below 13°dF, there is no need to use salt in your dishwasher. If this is the case, “No Salt Warning Indicator” (if any) illuminates continuously on the panel of your machine.
If the water hardness level adjustment is set to level 1, the “No salt warning indicator” will illuminate continuously although it is not necessary to use salt. If you

use salt under this condition, salt will not be consumed and the Salt indicator will not illuminate.

i	If you move your house, it is necessary to readjust water hardness level of your machine by considering the information given above according to the hardness level of the supply water in your new location. Your machine will display the most recently adjusted water hardness level.

operates with the same performance continuously. Dishwasher salt is used for this purpose.

i	Use only special softening salts produced particularly for the dishwashers in your machine.

i	It is recommended to use granule- or powder-formed softening salts in the water softening system. Do not use salts that do not completely dissolve in water such as table salt or rock salt. Otherwise the performance of the system may deteriorate in time.

i	Salt reservoir will be filled with water when you start the product. For this reason, add salt before operating the machine.

1. Firstly, take the lower basket out to add softening salt.
2. Turn the salt reservoir lid counter-clockwise to open it (A, B).

3. Add 1 litre of water to salt reservoir of your machine only in initial use (C).

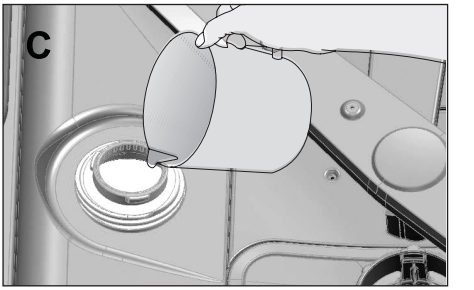

4. Fill the salt reservoir with salt by using the salt funnel (D). To speed up dissolution rate of salt in water, stir it with a spoon.

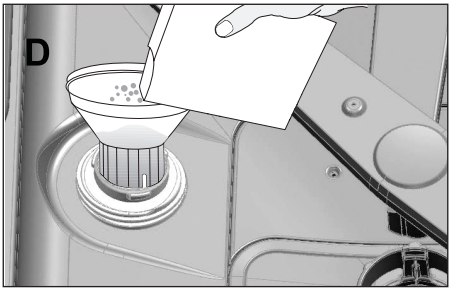

	You can put about 2 kg of softening salt into the salt reservoir.

5. Replace the lid and tighten it when the reservoir is full.

	You need to add salt right before starting the machine. Thus, the overflowing salty water will be flushed immediately, preventing the risk of corrosion in machine. In cases where you would not start washing immediately, run your machine empty in the shortest program.

	Since different salt brands in the market have different particle sizes and since the water hardness may vary, dissolution of the salt in water may take a couple of hours. Therefore, Salt Indicator remains on for a while after adding salt into the machine.

Detergent

You can use powder, liquid/gel or tablet detergents in the machine.

	Only use in the machine the detergents produced particularly for use with dishwashers. We recommend you not to use detergents that contain chlorine and phosphate as they are harmful for the environment.

Adding detergent

	Pay attention to the warnings on the detergent packaging to get better washing and drying results. Contact the manufacturer of the detergent for further questions.

	Do not put solvents into the detergent dispenser. There is the risk of explosion!

Put the detergent into the detergent dispenser just before operating the machine as illustrated below.

1. Push the latch to right to open the detergent dispenser lid (A).

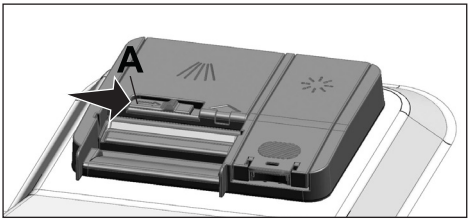

2. Put suggested amount of powder, liquid/gel or tablet detergent in the reservoir.

Inside the detergent dispenser there are level markings that help you use appropriate amount of powder detergent. When brimful, detergent dispenser will contain 45 cm³ of detergent. Fill detergent up to 15 cm³ or 25 cm³ level marks in the detergent dispenser according to fullness of the machine and/ or soiling degree of the dishes. One tablet is enough if you are using detergent tablets.

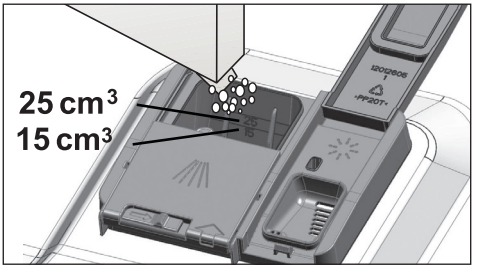

3. Push the lid of the detergent dispenser to close it. A "click" will be heard when the lid is closed.

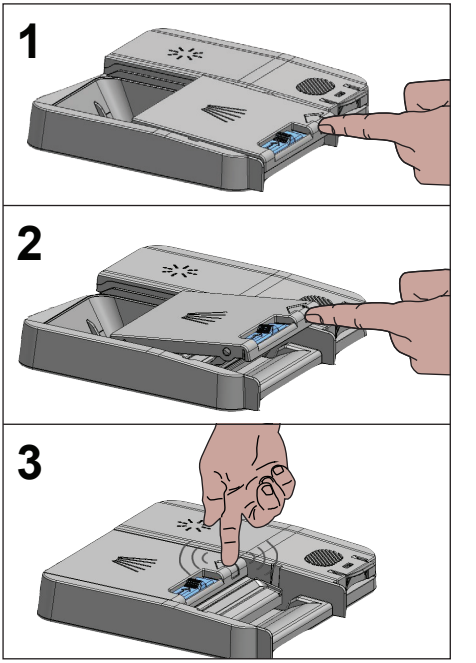

Use powder or liquid/ gel detergent in short programmes without prewash since the solubility of the tablet detergent changes depending on the temperature and time.

Tablet detergents

In addition to the conventional tablet detergents, there are also commercially available detergent tablets that show water softening salt and/or rinse aid effect. Some types of these detergents contain special-purpose components such as glass and stainless steel protectors. These tablets show their effects up to a certain water hardness level (21°dH).

Water softening salt and rinse aid must also be used together with the detergent if the water hardness level is above the mentioned level.

	The best washing performance in dishwashers is obtained by using detergent, rinse aid and water softening salt individually.

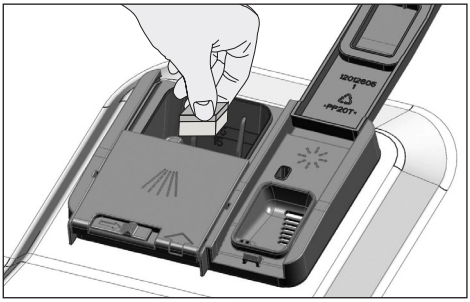

	Observe the instructions of the detergent manufacturer on the package when using tablet detergents.

	Contact the detergent manufacturer if your dishes are wet and/or if you notice limescale spots particularly on your glasses after the washing programme is over when using a tablet detergent.

When you switch to powder detergent from tablet detergent:

1. Make sure that salt and rinse aid reservoirs are full.
2. Set the water hardness to the highest level and perform an empty run.
3. After the empty washing cycle, review the user manual and readjust the water hardness level so as to suit the water supply.
4. Make the appropriate rinse aid settings.

Rinse aid

	The rinse aid used in dishwashers is a special combination that aims to increase drying efficiency and prevent water or lime stains on the washed items. For this reason, care must be paid to have rinse aid in the rinse aid reservoir and to use rinse aids produced specially for dishwashers only.

1. Open the lid of the rinse aid reservoir with the help of the latch.

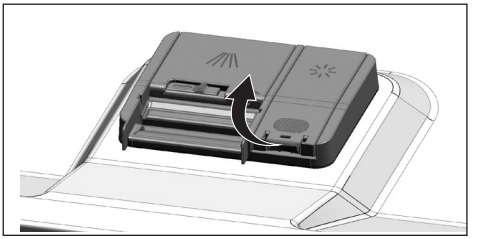

2. Fill the reservoir until “MAX” level.

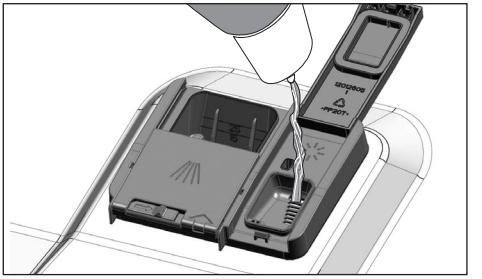

3. Slightly press the point (B) of the reservoir lid to close it.

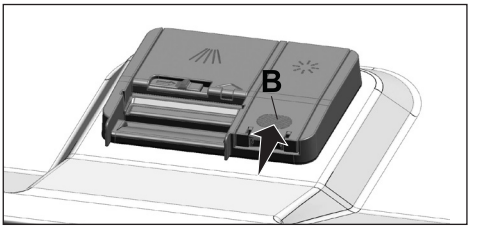

4. If there are stains on tableware items after washing, level must be increased and if there is a blue trace after wiping them by hand, it must be decreased. This is set to position 3 as factory default.

i	The rinse aid adjustment is described under "Adjusting the amount of rinse aid" in the section for operating the machine.

i	Wipe clean any spilled rinse aid outside the reservoir. Rinse aid that spilled accidentally will cause foaming and it will eventually decrease washing performance.

Items not suitable for washing in the dishwasher

- Never wash dishes soiled by cigarette ash, candle remnants, polish, dyestuff, chemicals, etc. in your dishwasher.
- Do not wash silverware and cutlery with wooden or bone stems, glued pieces, or pieces that are not resistant to heat, as well as copper and tin-plated containers in the dishwasher.

i	Decorative prints of chinaware as well as aluminum and silver items may get discoloured or tarnished after washing in the dishwasher just as it happens in handwashing as well. Some delicate glass types and crystals may become dull in time. We strongly recommend you to check if the tableware you are going to purchase is suitable for washing especially in the dishwasher.

Placing the dishes into the dishwasher

You can use your dishwasher in the optimum way with respect to energy consumption and washing and drying performance only if you place the dishes in an orderly way.

- Wipe away any coarse food remnants (bones, seeds, etc.) on the dishes before placing them in the dishwasher.
- Place thin, narrow pieces in the middle sections of baskets if possible.
- Place the heavily soiled and bigger items in the lower basket and smaller, delicate and light items in the upper basket.
- Place the hollowed dishes such as bowls, glasses and pans upside down in the dishwasher. Thus, accumulation of water in deep hollows is prevented.

⚠	To prevent possible injuries, always place the sharp and pointed dishes such as service fork, bread knife, etc. upside down so as their pointed ends will face down or they will lie horizontally in the dish basket.

Unload dishes in the lower basket first and then the dishes in the upper basket.

Suggestions for loading the dishwasher

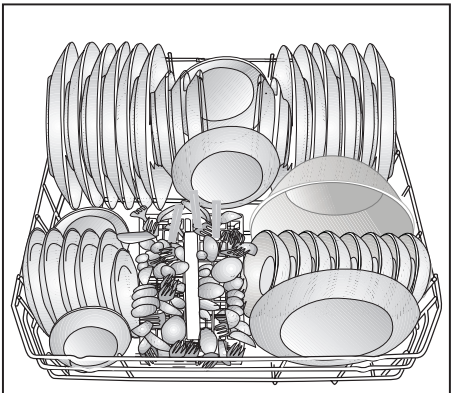

Lower basket

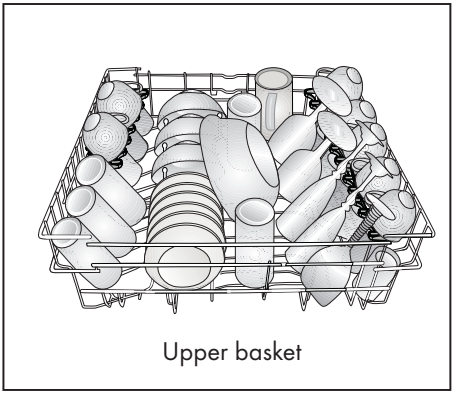

Upper basket

Improper Loading Of Dishware

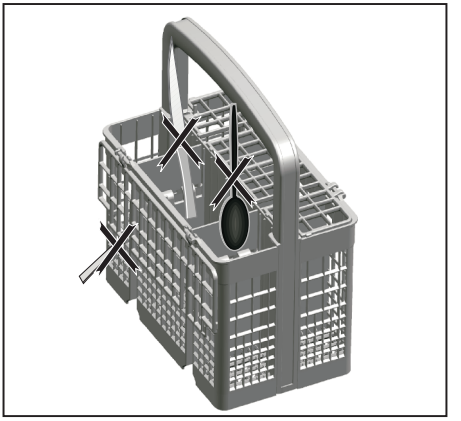

Improper Loading Of Dishware

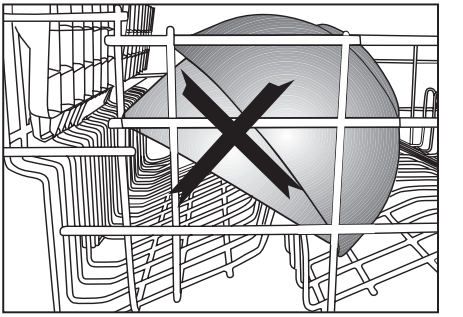

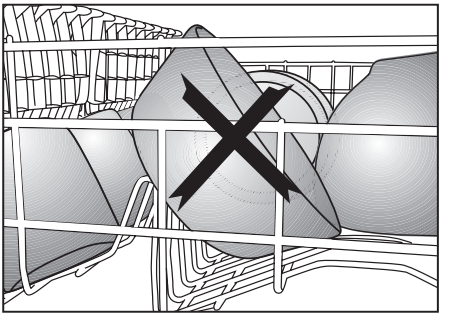

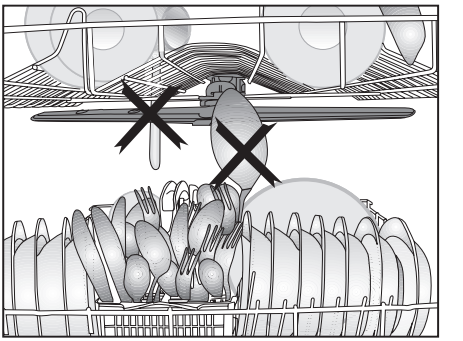

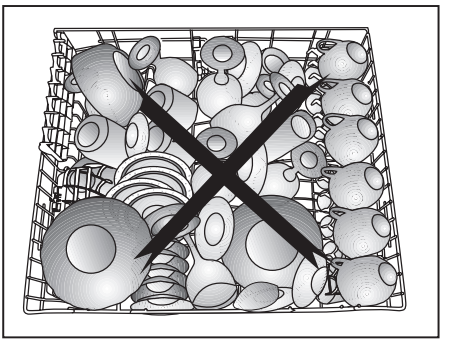

Adjusting the height of the upper basket

The upper basket height adjustment mechanism has been designed for you to create large spaces in the lower or upper sections of your machine depending on your needs by adjusting the height in the upper or lower direction while your basket is empty or loaded.

Thanks to this mechanism, you can use your basket in three different positions, namely lower, middle and upper positions (1, 2, 3).

1. To raise your basket, hold the upper basket wires with both hands while the basket is in the lowermost position and pull them up (A).
2. You will hear a "Click" from the right and left mechanisms, indicating that the basket has reached the next level. Release the basket.

Repeat the process if the height is not sufficient.

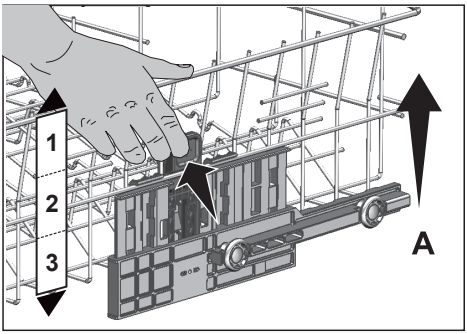

To lower the basket, while it is in the uppermost position;

1. Hold the upper basket wires with both hands, slightly lift up the basket and simultaneously push and release the latches shown in the figure (B).
2. Lower the basket from its current position to the lower one.
3. Release the basket after it has reached one level down.

Repeat the process if the height is not sufficient.

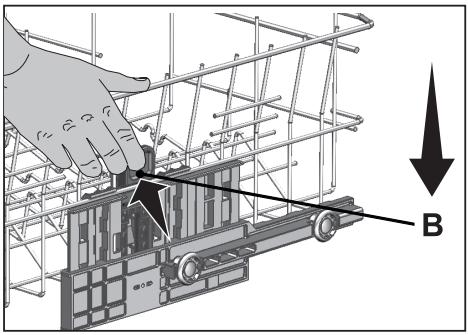

i	The movement mechanism may not function properly if the upper basket is overloaded or if the weight distribution is not balanced. In heavier conditions, there is the risk of falling one level down.
i	Make sure that the adjustment mechanism has the same positions on the right and left sides of the upper basket.

Collapsible upper basket wires

You can use collapsible wires when you need a larger space for your dishes in the upper basket of your machine.
To bring the collapsible wires into horizontal position, grab the wire from the middle position and push them in the direction of arrow in the figure. Place your larger dishes into the area created. To bring the wires back to vertical position, just lift them up.

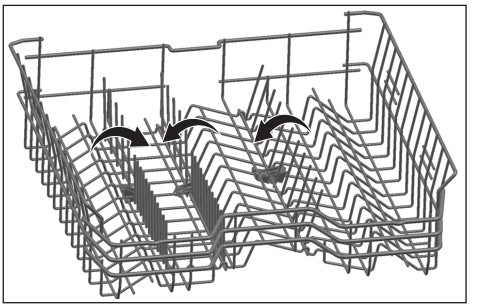

Bringing the wires to the horizontal position by holding them from the tips may cause them to bend. Therefore, hold the wires from their stems while bringing them to the horizontal or vertical positions.

Upper basket multipurpose service rack

This accessory located at the upper basket of your machine allows you to easily wash pieces such as extra long ladles and bread knives.

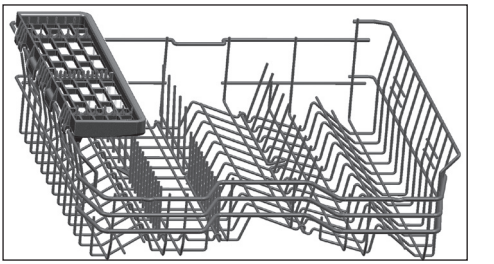

You can lift up the upper basket multipurpose service rack to remove it if you do not want to use it.

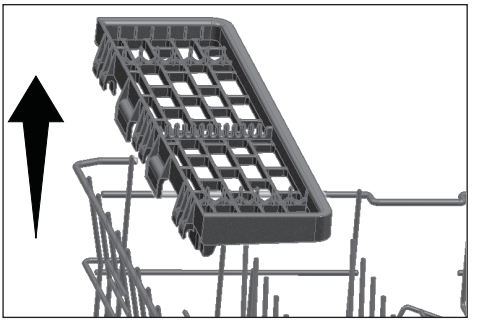

If you want to use the upper basket multipurpose service rack again, you can easily attach it to the side section of your upper basket.

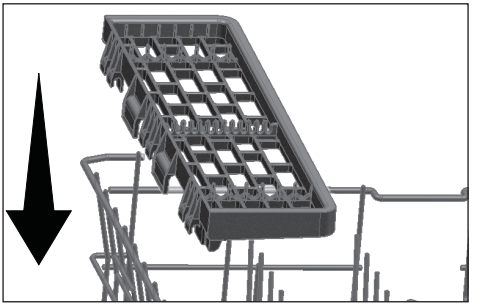

Collapsible lower basket tines

There are foldable tines (A) located at the lower basket of the machine are designed for an easier placement of large pieces such as pans, bowls, etc. You can create larger spaces by folding each tines individually or all of them at once.

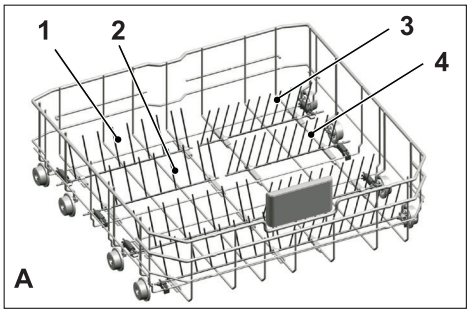

To bring the collapsible tines into horizontal position, grab the tines from mid position and push them in the directions of arrows (B). To bring the tines back to vertical position, just lift them up. Collapsible tines will click into the latch again (C).

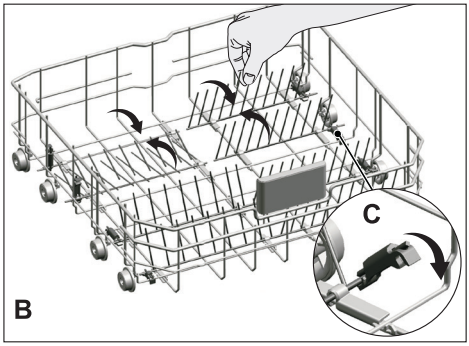

Bringing the tines to the horizontal position by holding them from the tips may cause them to bend. Therefore, it will be appropriate to bring the tines in the middle to horizontal or vertical position by holding them from their stems and pushing in the direction of arrow.

Cutlery basket

Cutlery basket is designed to wash your dishes such as knife, fork, spoon, etc. in an efficient manner.
Since the cutlery basket can be moved (A, B), you can create more space while placing your dishes in the lower basket and free up space for your dishes of different sizes.

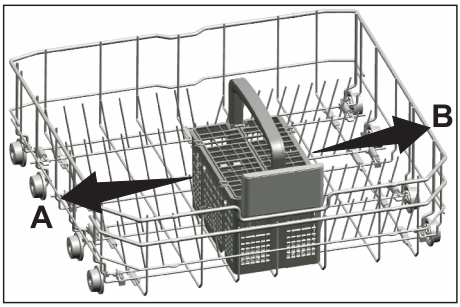

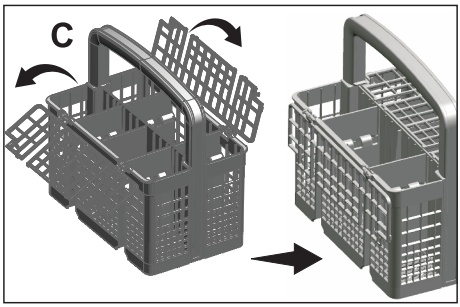

Upper basket height adjustable rack

Use the lower and upper parts of the height adjustable racks in the upper basket of the machine by sliding them down or up according to the heights of the glasses, cups or etc. (A, B, C).

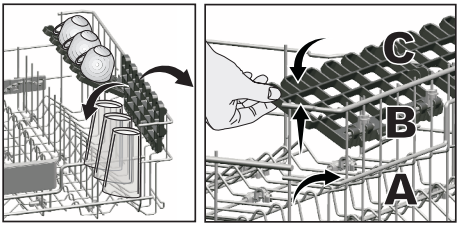

Tray Wash Supports

Use the supports to wash trays in the bottom basket.
See the Auxiliary functions section for appropriate programme and function selection.

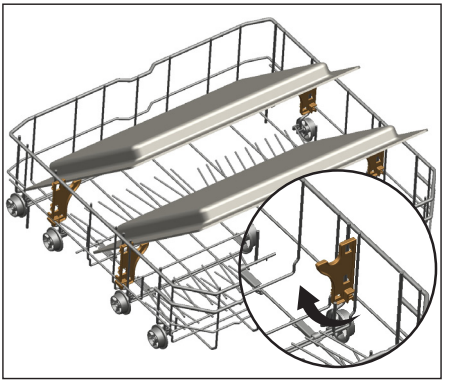

5 Operating the product

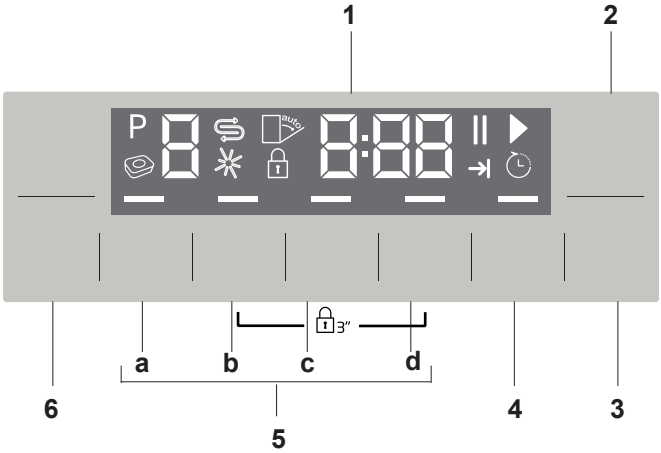

1. Display
2. On/Off key
3. Start/Pause/Cancel key
4. Time Delay key
5. Function keys
   a) Half Load Function
   b) Rapid Clean Function
   c) Super Gloss Function
   d) IntenseWash Function
6. Programme Selection keys

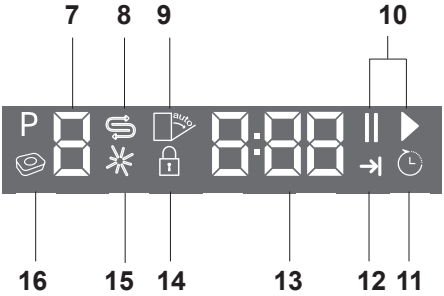

7. Programme indicator
8. Salt (⇶) indicator
9. Not in use
10. Start (▶) / Pause (❚❚) indicator
11. Time Delay indicator
12. End of Programme indicator
13. Screen information line
14. Child Lock indicator
15. Rinse aid (✳) indicator
16. Not in use

Keys

On / Off key

It is used to turn on or off the machine. Press On / Off Key to switch ON. Machine will turn on with economy programme in On mode and the number of the economy programme will appear on the programme indicator. In Off position, indicators on the display will turn off.

Start / Pause / Cancel key

It is used to start, pause or cancel a selected programme or function.

Programme Selection keys

They are used to select the washing programme you determined from the table of “Programme data and average consumption values”.

Delayed Start key

It should be pressed to make the time delay settings.

Preparing the machine

1. Open the door of the dishwasher.
2. Place the dishes in accordance with the instructions in the user manual.
3. Make sure that the upper and lower impellers rotate freely.
4. Put adequate amount of detergent into the detergent dispenser.
5. Check if the Salt and Rinse Aid indicators light and add salt and/or rinse aid if needed.
6. Close the door of the dishwasher.

Programme selection

1. Press the On/Off button to turn on your machine.
2. Refer to the table of "Programme data and average consumption values" to determine a washing programme suitable for your dishes.
3. Press Programme Selection keys until the number of the programme you selected appears on the Programme indicator. Use P+ to switch to the next programme, and P- to switch to the previous one.

Programme Table

Programme number	0	1	2	3	4	5	6	7	8
Programme name	ProClean	Eco *	Auto	Hygiene+	Intensive	ExpressDry 58'	Glass Care	Mini 30'	Prewash
Cleaning temperature	-	50 °C	40-65 °C	70 °C	70 °C	60 °C	40 °C	35 °C	-
Degree of Soiling	This programme is recommended to be operated on every 1-2 months for machine cleaning and necessary hygiene. The programme should be operated while the machine is empty. In order to achieve an efficient result use together with special machine cleaning agents	Most economical washing programme for the medium soiled daily dishes that are kept waiting.	Determines the soiling degree of the dishes and sets the temperature and amount of the washing water as well as the washing time automatically. Suitable for all types of dishes.	Suitable for the dishes which require extra hygiene such as articles for babies. Also suitable for heavily soiled dishes.	Suitable for heavily soiled dishes, pots and pans.	Daily washing programme for normally soiled dishes in the fastest way.	Special programme for gentle cleaning of delicate glassware.	Suitable for lightly soiled daily dishes that are scraped or pre-cleaned.	Suitable for removing the remnants on the soiled dishes that will be kept waiting in the machine for a few days, and thus, for preventing the bad odour buildup.
	-	Medium	Medium to high	High	High	Medium	Low	Low	-
Prewash	-	+	+	+	+	-	+	-	+
Wash	-	+	+	+	+	+	+	+	-
Dry	-	+	+	+	+	+	+	-	-
Duration (min)	75	223	100-180	160	148	58	120	30	15
Water (l)	15,2	11	11,6-15,8	20,2	17,6	11,4	15,6	11,8	4,2
Energy (kWh)	0,70	0,93	0,90-1,45	1,86	1,65	1,18	1,26	0,80	-

The consumption values shown in the table were determined under standard conditions. Differences may therefore occur under practical conditions. * Reference programme for testing institutes. The tests in accordance with EN 50242 must be carried out with a full water softener salt dispenser and a full rinse aid reservoir, and using the test programme.

Auxiliary functions

Washing programmes of your dishwasher are designed to obtain the best cleaning effect, considering the type of the soil, soiling degree and properties of the dishes to be washed. Auxiliary functions are provided in order to enable you to save time, water and energy and to perform a more comfortable washing with conditions specific to you.

	Auxiliary functions may cause changes in the programme duration.

	Auxiliary functions are not suitable for all washing programmes. Indicator of the auxiliary function that is not compatible with the programme will not be active.

To add auxiliary function to the programme:

1. Select the desired washing programme by pressing the programme selection key.
2. In the selected washing programme, if auxiliary function is selected, its symbol will be displayed on the screen. If the function button is pressed again the symbol will disappear and selection is cancelled.
3. Selection will be cancelled when you press the function key again.

Rapid Clean Function

It shortens the time of the washing cycle selected and decreases water consumption by enabling washing under higher pressure.

Half Load function

It is used to operate the machine without loading it completely.

1. Load your dishes in the machine as you like.
2. Turn the machine on with On/Off key.
3. Select the desired programme and press the Half Load key. The Half Load indicator will light on the display in the Function Selected indicator.
4. Start the programme by pressing Start / Pause / Cancel key.

	With the Half Load function you can save both water and power while using the lower and upper baskets of the machine.

Super Gloss Function

It provides superior drying performance.

IntenseWash Function

This function operates the lower impeller with a higher pressure and higher speed to enable a better washing for dishes such as pans and trays with stubborn, dried soiling.

Auto Tablet Feature
Auto Tablet is a feature which detects the use of combined tablet detergents automatically.

	Drying performance of these type of detergents is improved by adjusting temperature and duration accordingly.

Owing to this feature, there is no need to press any button in case of a tablet detergent use.

Feature can be activated if automatic detection is desired.
To activate / to deactivate:
1. After turning on the machine, press Time Delay and P+ keys simultaneously. Keep them pressed until the countdown 3, 2, 1 is completed on the display.
2. Press P+ key to activate the a: option. Automatic detergent detection feature is disabled at “a:0” option and enabled at "a:1" option. Set the desired option by pressing the Time Delay key.
3. Turn off the machine with On/Off key to save the changes.

Programming the washing time

Time Delay
If an economical electricity tariff is applied in your region, you can use the Time Delay function to wash your dishes during appropriate hours.
You can delay the start of the selected programme until 24 hours. Time Delay cannot be set after the programme starts.

1. Press the Time Delay function key after selecting the washing programme and other auxiliary functions.
2. Once you press the Time Delay key, Display Information Line will show "0:30" and Time Delay indicator will start flashing.
3. Set the desired time by pressing the Time Delay key. Time will increase with increments of 30 minutes up to 6 hours and after that in 1 hour increments up to 24 hours every time you press the key.
4. Press Start / Pause / Cancel key to start countdown for the Time Delay. Time Delay indicator and Start / Pause indicator will light continuously until the end of the period. Time Delay is displayed on the Display Information Line. Selected programme will start as soon as the countdown is over.

Changing the settings while Time Delay function is enabled
While the Time Delay function is activated, you cannot make changes in the washing programme, auxiliary functions or the duration of delay time.

	Programme and auxiliary functions cannot be set/changed after the programme has started.

To cancel the Time Delay function
1. Press and hold Start / Pause / Cancel key for 3 seconds.
2. When the Start / Pause / Cancel key is pressed and hold, "3", "2", "1" appear on the Display Information Line. Time Delay indicator will turn off at the end

of the cancellation process and delaying process is cancelled.

	You can select and start a new programme following the cancellation of Time Delay function.

	Time Delay function can not be set after the programme starts.

Starting the programme

To start your machine after selecting the programme and auxiliary functions, press Start / Pause / Cancel key. Once the programme starts a tune is played and the estimated time remained to the end of the programme will appear on the Display Information Line. Start / Pause / Cancel indicator starts lighting continuously.

	Your machine performs water softening depending on the hardness level of the supply water. Remaining time displayed towards the end in some programmes can be different from the time indicated at the beginning due to this process. The total time can also change while the programme is running depending on the ambient temperature where your machine is installed, temperature of the supply water and amount of the dishes.

	Pay attention not to open the door of the machine when it is running. Stop the machine by pressing Start / Pause / Cancel key if you have to open the door. Then, open the door of the machine. There may be a rush of vapour when you open the door of your machine; be careful. Close the door of your machine and press Start/Pause/Cancel key again. Programme will resume running.

	The machine will remain silent in pause mode for some time in order to remove the water in the machine and on the dishes completely and to have the water softener cleaned, and then it will resume running in drying mode.

Child (Key) Lock

You may prevent other people from interrupting and changing the programme cycle and time delay while the machine is running.

To activate the Child Lock:

1. Pres Child (Key) Lock keys simultaneously and hold for 3 seconds.
2. "3", "2", "1" is displayed on Display Information Line and key lock is activated.

Child Lock prevents the selected programme or functions from being changed and disables the Start / Pause / Cancel key.

Child Lock does not lock the door of the machine.

If you turn your machine off by using On/Off key at the end of the programme, the Child Lock will be deactivated automatically.

For energy saving, the product is automatically turned off following the completion of the programme or if the programme is not started.

To deactivate the Child Lock:

1. Pres Child (Key) Lock keys simultaneously and hold for 3 seconds.
2. "3", "2", "1" is displayed on Display Information Line and key lock is cancelled.

Cancelling the programme

1. Press Start/Pause/Cancel key for 3 seconds to cancel the programme.
2. Release the key when the Start / Pause indicator starts flashing. For a couple of minutes the machine will fulfill the necessary operations required to cancel the programme.

There might be residues of detergent or rinse aid left in the machine and / or on the pieces being washed depending on the step the programme you have cancelled was in.

Salt indicator (⚗)

Please check the salt indicator on the display to see whether there is adequate amount of softening salt in the dishwasher or not. You need to refill the salt reservoir with salt whenever salt warning indicator appears on the display of your machine.

Adjusting the water hardness level is explained in Water Softening System section.

Rinse Aid indicator (✳)

Please check the rinse aid indicator on the display to see whether there is adequate amount of rinse aid in the dishwasher or not. You need to refill the rinse aid reservoir with rinse aid whenever rinse aid warning indicator appears on the display of your machine.

Adjusting the amount of rinse aid

1. After turning on the machine, press Time Delay and P+ keys simultaneously. Keep them pressed until the countdown 3, 2, 1 is completed on the display.
2. Press P+ to move to position P on the display.
3. Set to the appropriate level with the Time Delay key.
4. Turn off the machine with On/Off key to save the changes.

No rinse aid dispensed in P:0 wash position.
1 dose of rinse aid is dispensed in P:1 position.
2 doses of rinse aid are dispensed in P:2 position.

3 doses of rinse aid are dispensed in P:3 position.
4 doses of rinse aid are dispensed in P:4 position.

End of programme

End of Programme indicator will light up once the washing programme is over.

1. Press the On/Off button to turn off your machine.
2. Close the tap.
3. Unplug the machine from the socket.

	For energy saving, the product is automatically turned off following the completion of the programme or if the programme is not started.

	Leave your dishes in the machine for about 15 minutes to cool down after they are washed. Your dishes will dry in a shorter time if you leave the door of your machine ajar during this period. This process will increase the drying effectiveness of your machine.

Water cut-off warning

If mains water is cut or water inlet tap is turned off the machine cannot take water in and E:02 icon will flash on the programme indicator. As long as the problem continues, washing programme is paused and the water inlet is checked regularly by the machine; when the water is restored E:02 icon will disappear after a while and the washing programme resumes.

Overflowing warning

If the machine intakes too much water or there is leakage at any of the components then the machine will detect this and E:01 icon will flash on the Programme indicator. As long as the overflowing continues safety algorithm will be active and try to discharge the water. If overflowing stops and safety is assured, E:01 icon will disappear. If E:01 does not disappear, there is a permanent fault. In this case the authorised service should be contacted.

ProClean

This programme is recommended to be operated on each 1-2 months for machine cleaning and necessary hygiene. The programme should be operated while the machine is empty. In order to achieve an efficient result, it is recommended to use together with special machine cleaning agents.

	Do not use this programme to clean dishes. As it operates in high temperatures, it is harmful for the dishes.

6 Maintenance and cleaning

Service life of the product extends and frequently faced problems decrease if it is cleaned at regular intervals.

⚠	Unplug the product and turn off the tap before attempting any cleaning procedures.
ℹ	Do not use abrasive substances for cleaning.
ℹ	Clean the filter and impellers at least once a week in order for the machine operates efficiently.

Cleaning the outer surface of the product

Wipe the outer surface and door gaskets of the product gently with a mild cleaning material and damp cloth. Wipe the "Control panel" only with a slightly damp cloth.

Cleaning the interior of the machine

- Clean the interior of the machine and the tank by running a programme with or without detergent based on the degree of soil.
- If water has remained in the machine, drain the water by performing the procedures under the topic "Canceling a programme". If the water cannot be discharged, remove the filters as specified in the "Cleaning the filters" section and check if there are any leftover deposits that have accumulated at the bottom of the machine, blocking the water path. Clean if necessary.

Cleaning the filters

Clean the filters at least once a week in order for the machine operates efficiently. Check if food residues are left on the filters. If there are food residues on filters, take them out and clean well under running water.

1. Turn the micro filter (1) and coarse filter (2) assembly counter clockwise and pull it out from its seating.

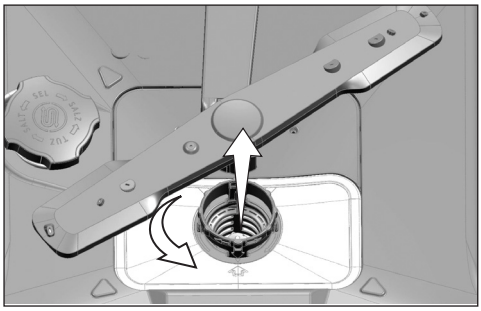

2. Pull out the metal/plastic filter (3) from the seating.

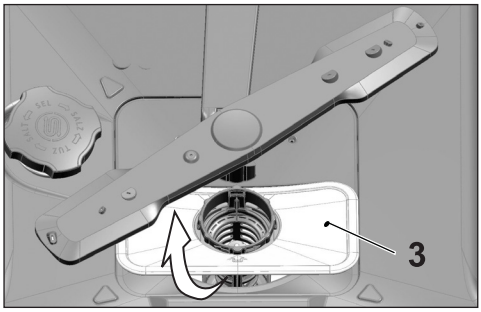

3. Press the two pawls on the coarse filter inwards and separate the coarse filter from the assembly.

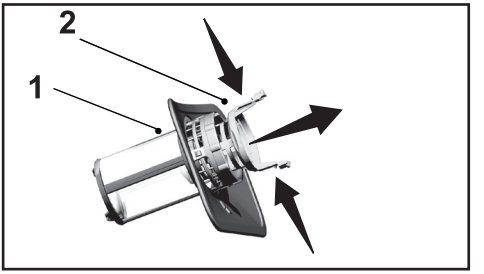

4. Clean all three filters under tap water by means of a brush.
5. Place the metal/plastic filter.
6. Place the coarse filter into the micro filter. Make sure that it is properly seated. Turn the coarse filter clockwise until a "click" sound is heard.

i	Do not use the dishwasher without filter.
i	Incorrect placement of the filters will reduce washing efficiency.

Cleaning the hose filter

Damages on the machine that may be caused by impurities coming from the urban supply water or your own water installation (such as sand, dirt, rust, etc.) can be prevented by means of the filter attached to the water inlet hose. Check the filter and the hose regularly and clean them if necessary.

1. Turn off the tap and remove the hose.
2. After taking out the filter, clean it under running tap water.
3. Place the cleaned filter back to its seat in the hose.
4. Install the hose to tap.

(depends on model)

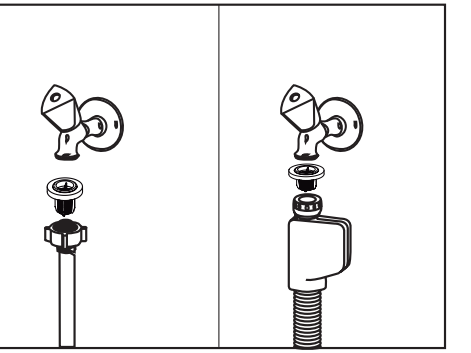

Cleaning the impellers

Clean the impellers at least once a week in order for the machine operates efficiently.

Lower impeller

Check if the holes on the lower impeller (1) are clogged. If they are clogged, remove and clean the impeller. You can pull the lower impeller up to remove it.

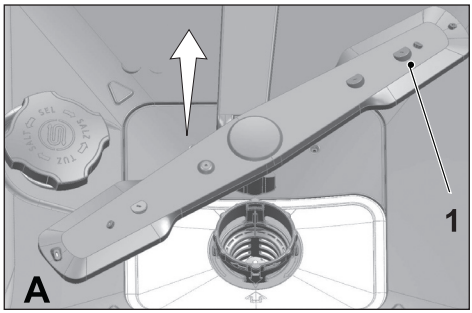

Upper impeller

Check if the holes on the upper impeller (1) are clogged. If they are clogged, remove and clean the impeller. Turn its nut to left to remove the upper impeller.

Make sure that the nut is tightened well when installing the upper impeller.

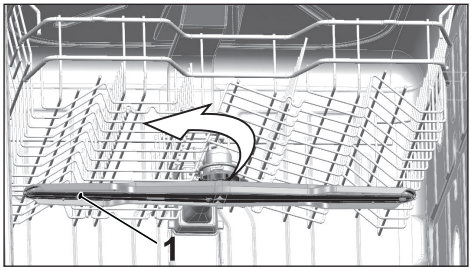

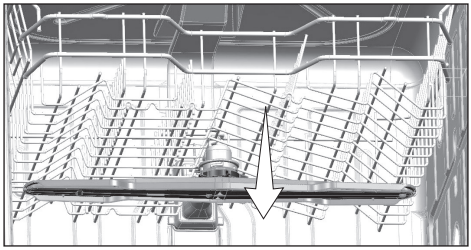

7 Troubleshooting

Machine does not start.

- Power cable is unplugged. >>> Check if the power cable is plugged in.
- Fuse is blown. >>> Check the fuses in your house.
- Water is cut. >>> Make sure that the water inlet tap is open.
- Door of the machine is open. >>> Make sure that you have closed the door of the machine.
- On / Off button is not pressed. >>> Make sure that you have turned on the machine by pressing the On / Off button.

Dishes are not washed clean

- Dishes are not placed orderly in the machine. >>> Load the dishes as described in the user manual.
- Selected programme is unsuitable. >>> Select a programme with a higher temperature and cycle time.
- Impellers are stuck. >>> Prior to starting the programme, turn the lower and upper impellers by hand to make sure that they rotate freely.
- Impeller holes are clogged. >>> Lower and upper impeller holes might be clogged with food remnants such as lemon pips. Clean the impellers regularly as illustrated in section “Cleaning and Care”.
- Filters are clogged. >>> Check if the filter system is clean. Clean the filter system regularly as illustrated in section “Cleaning and Care”.
- Filters are installed incorrectly. >>> Check the filter system and make sure that it is installed correctly.
- Baskets are overloaded. >>> Do not overload the baskets in excess of their capacity.
- Detergent is stored under unsuitable conditions. >>> If you are using powder detergent, do not store the detergent package in humid places. Keep it in a closed container if possible. For ease-of-storing, we recommend you to use tablet detergents.
- Detergent is not sufficient. >>> If you are using powder detergent, adjust the amount of detergent according to the soiling degree of your dishes and/ or programme definitions. We recommend you to use tablet detergents for optimum results.
- Rinse aid is not sufficient. >>> Check the rinse aid indicator and add rinse aid if necessary. Increase the rinse aid setting if there is enough amount of rinse aid in the machine.
- Detergent dispenser lid is left open. >>> Make sure that the detergent dispenser lid is closed tightly after adding detergent.

Dishes are not dry at the end of cycle

- Dishes are not placed orderly in the machine. >>> Place your dishes in a way that no water will accumulate in them.
- Rinse aid is not sufficient. >>> Check the rinse aid indicator and add rinse aid if necessary. Increase the rinse aid setting if there is enough amount of rinse aid in the machine.
- Machine is unloaded right after the programme is over. >>> Do not unload your machine right after washing process is completed. Slightly open the door and wait for evacuation of the steam inside for a while. Unload the dishes after the pieces cool down to a touchable level. Start unloading process from the lower basket. Thus, dropping of water remained on a piece at upper basket onto the pieces at lower basket is prevented.
- Selected programme is unsuitable. >>> Since rinsing temperature is low at programmes with short duration, drying performance will also be low. Select programmes with longer duration for a higher drying performance.
- Surface quality of the kitchen utensils is deteriorated. >>> Desired washing performance can not be obtained on kitchen utensils with deteriorated surfaces and it is not suitable to use such utensils in terms of hygiene as well. Also, water can not flow easily on deteriorated surfaces. It is not recommended to wash such kitchen utensils in dishwasher.

i	It is normal that drying complaints can be experienced with Teflon kitchen utensils. It is associated with the structure of Teflon. Since the surface tensions of Teflon and water are different, water droplets will remain as beads on the Teflon surface.

Tea, cafe or lipstick stains remain on dishes.

- Selected programme is unsuitable. >>> Select a programme with a higher temperature and cycle time.
- Surface quality of the kitchen utensils is deteriorated. >>> Tea and cafe stains or other dye spots may not be cleaned in dishwasher when they have penetrated in deteriorated surfaces. Desired washing performance can not be obtained on kitchen utensils with deteriorated surfaces and it is not suitable to use such utensils in terms of hygiene as well. It is not recommended to wash such kitchen utensils in dishwasher.
- Detergent is stored under unsuitable conditions. >>> If you are using powder detergent, do not store the detergent package in humid places. Keep it in a closed container if possible. For ease-of-storing, we recommend you to use tablet detergents.

Lime traces remain on dishes and glassware gains a misty appearance

- Rinse aid is not sufficient. >>> Check the rinse aid indicator and add rinse aid if necessary. Increase the rinse aid setting if there is enough amount of rinse aid in the machine.

- Water hardness setting is low or salt level is insufficient >>> Measure the hardness of the supply water appropriately and check the water hardness setting.
- Salt leakage exists. >>> Pay attention not to spill salt around the salt filling hole while adding salt. Make sure that the salt reservoir lid is tightly closed after finishing the filling process. Run the prewash programme to remove the salt that spilled inside the machine. Since the salt granules that will remain under the lid will dissolve during prewash, causing the lid loosen, check the lid once again at the end of the programme.

There is a different odour in the machine

A new machine has a peculiar odour. It will fade out after a couple of washes.

- Filters are clogged. >>> Check if the filter system is clean. Clean the filter system regularly as illustrated in section “Cleaning and Care”.
- Dirty dishes are kept in dishwasher for 2-3 days. >>> If you are not going to start the machine right after you have put the dishes into it, remove the remnants on the dishes and run the Prewash programme without detergent every 2 days. In such cases, do not close the door of the machine completely in order to avoid odour build up in machine. You can also use commercially available odour removers or machine cleaners.

Rust, discoloration or surface deterioration occurs on dishes

- Salt leakage exists. >>> Salt may cause deterioration and oxidation on metal surfaces. Pay attention not to spill salt around the salt filling hole while adding salt. Make sure that the salt reservoir lid is tightly closed after finishing the filling process. Run the prewash programme to remove the salt that spilled inside the machine. Since the salt granules that will remain under the lid will dissolve during prewash, causing the lid loosen, check the lid once again at the end of the programme.
- Salty food remnants have remained on dishes for a long time. >>> If cutlery soiled with such foods will be kept waiting in machine, dirt must be removed by prewash or dishes must be washed without being kept waiting.
- Electric installation is not grounded. >>>Check if your machine is connected to the actual grounding line. Otherwise, the static electric created in the product causes arcs on the surfaces of metal items creating pores, removing the protective cover on the surface and causing discoloration.
- Intensive cleansers such as bleaches are used. >>> Protective cover on metal surfaces gets damaged and looses its efficiency in time when it gets in contact with cleansers such as bleach. Do not wash your dishes with bleach.
- Metal items particularly such as knives are used for purposes other then their intended uses. >>> Protective cover on the edges of knives may get

damaged when they are used for purposes such as opening cans. Do not use metal kitchen utensils out of their intended uses.

- Cutlery are made of low quality stainless steel. >>> Corrosion on such items is inevitable; they should not be washed in dishwashers.
- Kitchen utensils that are already corroded are washed in dishwasher. >>> Rust on a corroded item can migrate to other stainless steel surfaces and cause corrosion on those surfaces as well. Such items should not be washed in dishwashers.

Detergent remains in detergent dispenser.

- Detergent dispenser was damp when adding detergent. >>> Make sure that the detergent dispenser is dried well prior to filling it with detergent.
- Detergent is added long before the washing process. >>> Pay attention to add detergent shortly before start-up of the washing.
- Opening of the detergent dispenser lid is prevented during washing. >>> Place the dishes in a way that will not prevent the detergent dispenser lid from opening and the water going into the machine from impellers.
- Detergent is stored under unsuitable conditions. >>> If you are using powder detergent, do not store the detergent package in humid places. Keep it in a closed container if possible. For ease-of-storing, we recommend you to use tablet detergents.
- Impeller holes are clogged. >>> Lower and upper impeller holes might be clogged with food remnants such as lemon pips. Clean the impellers regularly as illustrated in section “Cleaning and Care”.

Decorations and ornaments on kitchen utensils are being erased.

i	Decorated glasses and decorated lustre porcelains are not suitable for washing in the dishwasher. Manufacturers of some glassware and porcelain tableware items do not recommend washing such kitchen utensils in the dishwashers either.

Dishes are scratched.

i	Kitchen utensils that contains or are made of aluminum should not be washed in dishwasher.

- Salt leakage exists. >>> Pay attention not to spill salt around the salt filling hole while adding salt. Spilled salt can cause scratches. Make sure that the salt reservoir lid is tightly closed after finishing the filling process. Run the prewash programme to remove the salt that spilled inside the machine. Since the salt granules that will remain under the lid will dissolve during prewash, causing the lid loosen, check the lid once again at the end of the programme.
- Water hardness setting is low or salt level is insufficient >>> Measure the hardness of the supply water appropriately and check the water hardness setting.

- Dishes are not placed orderly in the machine. >>> When placing the glasses and other glassware into the basket lean them not against other dishes but the edges or racks of the basket or the glass support tines. Striking of the glasses to each other or to other dishes due to the impact of water during washing can cause breaks, or scratches on their surfaces.

A smear remains on glasses that resembles milk stain which can not be removed when wiped by hand. A bluish / rainbow appearance occurs when the glass is pointed to light.

- Excessive rinse aid is used. >>>Lower rinse aid setting. Clean the spilled rinse aid when adding rinse aid.
- Corrosion has occurred on glass due to soft water. >>> Measure the hardness of the supply water appropriately and check the water hardness setting. If your supply water is soft (<5 dH), do not use salt. Choose programmes that wash in higher temperatures (e.g. 60-65°C). You can also use glass protective detergents that are commercially available.

Foam forms in the machine.

- Dishes are washed with hand-wash detergent by hand but not rinsed before placing them into the machine. >>> Hand-wash detergents do not contain antifoam. There is no need to hand-wash the dishes before placing them into the machine. Removing the coarse soil on the dishes under tap water, with a tissue paper or fork will be sufficient.
- Rinse aid has spilled into the machine when adding rinse aid. >>> Take care that rinse aid is not spilled in the machine when you are filling it. Clean any spilled rinse ait with the help of a tissue paper/towel.
- Lid of the rinse aid reservoir is left open. >>> Make sure that the lid of the rinse aid reservoir is closed after adding rinse aid.

Kitchen utensils are broken.

- Dishes are not placed orderly in the machine. >>> Load the dishes as described in the user manual.
- Baskets are overloaded. >>> Do not overload the baskets in excess of their capacity.

Water remains in the dishwasher at the end of the programme.

- Filters are clogged. >>> Check if the filter system is clean. Clean the filter system regularly as illustrated in section “Cleaning and Care”.
- Discharge hose is clogged/blocked. >>> Check the discharge hose. If necessary, remove the discharge hose, clear the blockage and insert is as illustrated in the user manual.

i	If you cannot eliminate the problem although you follow the instructions in this section, consult your dealer or the Authorised Service Agent. Never try to repair a nonfunctional product yourself.

Guarantee Details

Your new Blomberg product is guaranteed against faulty materials, defective components or manufacturing defects. The guarantee starts from the date of original purchase of the product for a period of three (3) years, unless Beko plc (the “Manufacturer”) agrees to extend the guarantee for the product in writing. If you have any questions about the guarantee on your product (including how long it is valid), please contact your retailer or our Call Centre on 0333 207 9870.

This guarantee does not in any way diminish or affect your statutory rights in connection with the product. This guarantee is in addition to your statutory rights as a consumer. If you have any questions about these rights, please contact the retailer from which you purchased the product. In certain circumstances, it is possible that your statutory rights may offer additional or higher levels of protection than those offered under the terms of this guarantee.

What is covered by this guarantee?

- Repairs to the product required as a result of faulty materials, defective components or manufacturing defects.
- Functional replacement parts to repair a product.
- The costs of a Blomberg Approved Engineer to carry out the repair.

What is not covered?

- Transit and delivery damage.
- Cabinet or appearance parts, including but not limited to control knobs, flaps and handles.
- Accessories and/or consumable items including but not limited to ice trays, scrapers, cutlery baskets, filters and light bulbs.
- Repairs necessary as a direct or indirect result of:
- Accidental damage, misuse or abuse of a product.
- An attempted repair of a product by anyone other than a Blomberg Approved Engineer (the “Engineer”).
- Installation or use of a product where such installation or use fails to meet the requirements contained in this guarantee or the User Instructions Booklet.
- Repairs to a product operated at any time on commercial or non-residential household premises (unless we have previously agreed to the installation environment).

This guarantee is limited to the cost of repairing the product. To the extent permitted by law, Beko plc (the “Manufacturer”) does not accept and will not be held liable for any financial loss incurred in connection with the failure of any product to operate in accordance with the expected standards. Such financial loss includes but is not limited to loss arising from:

- Time taken off work.
- Damaged food, clothing or other items.
- Meals taken at restaurants or from takeaways.
- General compensation for inconvenience.

Important Notes

- Your product is designed and built for domestic household use only.
- The guarantee will automatically be void if the product is installed or is used in commercial or non-residential domestic household premises, unless we have previously agreed to the installation environment.
- The product must be correctly installed, located and operated in accordance with the instructions contained in the User Instructions Booklet provided with your product.
- Professional installation by a qualified Electrical Domestic Appliance Installer is recommended for all Washing Machines, Dishwashers and Electric Cookers (as incorrect installation may result in you having to pay for the cost of repairing the product).
- Gas Cookers must be professionally installed by a Gas Safe (or Gas Networks Ireland for Republic of Ireland) registered gas installer.
- This guarantee is given in respect of products purchased and used within the United Kingdom and the Republic of Ireland.
- This guarantee is effective from the initial date of purchase of a new product from an authorised retailer and will be void if the product is resold.
- This guarantee does not apply to graded sales (where the product is purchased as a “second”).
- Possession of a copy of these terms and conditions does not necessarily mean that a product has the benefit of this guarantee. If you have any questions, please call our Call Centre on the number set out above.
- The Manufacturer reserves the right to terminate the guarantee if its staff or representatives are subjected to physical or verbal abuse in the course of carrying out their duties.
- Optional extras, where available (i.e. extendable feet) are supplied on a chargeable basis only.

Does Blomberg offer replacements?

This is a repair-only guarantee. On occasion the Manufacturer may at its sole discretion, replace your product with a new product instead of carrying out a repair. Where a replacement is offered, this would normally be an identical model, but when this is not possible, a model of similar specification will be provided. The Manufacturer will cover the costs and arrange for the delivery of the new product and for the return of the old product. Any costs related to disconnecting the faulty product and installing the replacement product

will not be borne by the Manufacturer unless previously agreed to in writing. The original guarantee will continue to apply to the replacement product; the new product will not come with a new guarantee.

When will the repair take place?
Our engineers work Monday to Friday 9.00am to 5.00pm. Appointments outside these hours may be possible at the sole discretion of the Manufacturer but cannot be guaranteed. Whilst our Engineers will endeavour to minimize inconvenience and to meet requests for specific timed appointments, this cannot be guaranteed. The Manufacturer will not be liable for delays or if it is unable to carry out a repair because a convenient appointment cannot be arranged.

Will there be any charge for the repairs?
It is your responsibility to provide evidence to the Engineer that your product is covered by this guarantee with a proof of purchase. The Manufacturer reserves the right to charge for the reasonable cost of any service call if:

- You cannot provide evidence that your product is covered by this guarantee.
- Where a service call has been made and the engineer finds that there is no fault with your product.
- That your product has not been installed or operated in accordance with the User Instructions Booklet.
- That the fault was caused by something other than faulty materials, defective components or manufacturing defects.
- For missed appointments.

Payment of these costs are due immediately upon the Engineer providing you with an invoice. If you fail to pay the costs for the service call in a timely manner, the Manufacturer reserves the right to terminate the guarantee.
If you are a resident of the United Kingdom, this guarantee will be governed by English law and subject to the English Courts, save where you live in another part of the United Kingdom, in which case the law and courts of that location will apply.

If you are resident in the Republic of Ireland, this guarantee will be governed by Irish law and the Irish courts will have jurisdiction.

HOW TO OBTAIN SERVICE

Please keep your purchase receipt or other proof of purchase in a safe place; you will need to have it should the product require attention under guarantee.

It will be useful if you complete the details below, as it will help us assist you when requesting service. (The model number is printed on the Instruction Booklet and the serial number is printed on the Rating Label affixed to the appliance). Recording of these details alone will not count as proof of purchase. A valid proof of purchase is required for under guarantee service.

The area around the product must be easily accessible to the Engineer without the need for cabinets or furniture being removed.

It is your responsibility to ensure our Engineers have a clean and safe environment to carry out any repairs.

……

Model No:

Serial No:

Retailer:

Date of purchase:

……

For service under guarantee simply telephone the appropriate number below

UK Mainland & Northern Ireland: 0333 207 9870.

Republic of Ireland: 01 691 0160

Register your appliance at www.blomberguk.com/register

Before requesting service please check the troubleshooting guide in the Operating Instructions as a charge may be levied where no fault is found even though your product may still be under guarantee.

Service once the manufacturers guarantee has expired

If you have purchased an extended guarantee please refer to the instructions contained within the extended guarantee agreement document, otherwise please call the appropriate number above where service can be obtained at a charge. Should you experience any difficulty in obtaining service contact the Blomberg Customer Helpline on Tel: 0333 207 9870 or e-mail: customerservice@support.Blomberguk.com

……

This guarantee is provided by Beko plc. Beko House, 1 Greenhill Crescent, Watford, Herts, WD18 8QU. Beko plc is registered in England and Wales with company registration number 02415578.

15 9558 0100_AB_BLOMBERG_D1_EN/ 16-06-17.(8:41)

Blomberg®

seit 1883

www.blomberginternational.com

info@blomberginternational.com