SONY

Television

Getting Started [1]

- Remote control [2]
  - Upper buttons on the remote control [3]
  - Middle buttons on the remote control [4]
  - Lower buttons on the remote control [5]
- Connecting terminal [6]
- How the LEDs light up [7]
- Home menu [8]
- Selecting inputs [9]
- Performing acoustic auto calibration [10]
- Accessibility features [11]

Useful features [12]

- Searching for content/operating the TV with your voice [13]
  - Using the remote control microphone [14]
  - Using the built-in MIC (only TVs with a built-in MIC) [15]
- Enjoying preferred apps [16]
  - Installing apps [17]
- Enjoying safe apps and video streaming services (Security and restrictions) [18]

Watching TV [19]

- Watching TV programmes [20]
  - Understanding the information banner icons [21]
  - Using the programme guide [22]
  - Configuring channel settings [23]
    - Receiving digital broadcasts [24]
    - Receiving satellite broadcasts [25]
    - Sorting or editing the channels [26]
  - Using the TV menu [27]
  - Using interactive broadcast TV services [28]
- Useful features when watching TV [29]
- Changing the picture and sound quality to your preferences [30]

- Adjusting the picture quality [31]
- Adjusting the sound quality [32]
- “Sound” advanced settings [33]

Recording TV Programmes [34]

- Recording to a USB HDD device [35]
  - Registering a USB HDD device [36]
  - One-touch recording [37]
  - Timer recording [38]
  - Information about using a USB HDD device for recording [39]
- Watching/deleting recorded content [40]
- Understanding the symbols displayed in the recorded title list [41]

Using the TV with Other Devices [42]

- USB devices [43]
  - Playing content stored on a USB device [44]
  - Information about USB devices used for storing photos and music [45]
  - Supported files and formats [46]
    - Photos [47]
    - Music [48]
    - Videos [49]
    - Audio sampling rates (for videos) [50]
    - External subtitles [51]
- Blu-ray and DVD players [52]
  - Connecting a Blu-ray or DVD player [53]
  - Watching Blu-ray and DVD discs [54]
- TV box [55]
  - Connecting a TV box [56]
  - How to control the TV box using the TV remote control [57]
- Displaying the iPhone/smartphone or iPad/tablet app screen on the TV [58]
- Computers, cameras, and camcorders [59]
  - Connecting a computer and viewing stored content [60]
  - Connecting a camera or camcorder and viewing stored content [61]
  - Computer video signal specifications [62]
- Audio system (such as an AV receiver or sound bar) [63]
  - Outputting audio from an audio system [64]
  - Connecting an audio system [65]
  - Adjusting an audio system [66]
  - Using the TV as a centre speaker (only models with TV centre speaker mode) [67]

- Pass-through audio formats supported with eARC [68]
- Bluetooth devices [69]
  - Connecting a Bluetooth device [70]
  - Adjusting the AV sync setting [71]
  - Supported Bluetooth profiles [72]
- BRAVIA Sync-compatible devices [73]
  - BRAVIA Sync overview [74]
  - Using features available for BRAVIA Sync-compatible devices [75]
  - Adjusting BRAVIA Sync settings [76]
- Viewing pictures in 4K from compatible devices [77]
  - Viewing pictures in 4K resolution [78]
  - Settings for viewing pictures through HDMI input with higher quality [79]
- BRAVIA Connectivity Guide [80]

Connecting to a Network [81]

- Connecting to a network [82]
  - Connecting to a network using a LAN cable [83]
  - Connecting to a network using a wireless connection [84]
    - Using Wi-Fi to connect the TV to the Internet/Network [85]
    - Using Wi-Fi Direct to connect to the TV (no wireless router required) [86]
- Home network features [87]
  - Adjusting home network settings [88]
  - Playing content from a computer [89]
  - Playing content from a media server [90]
- Viewing Internet media [91]

Settings [92]

- Using the Quick Settings [93]
- Channels & Inputs [94]
- Display & Sound [95]
- Network & Internet [96]
- Accounts & Sign-In [97]
- Privacy [98]
- Apps [99]
- System [100]
- Remotes & Accessories [101]
- Help & feedback [102]

- Timers & Clock [103]

Troubleshooting [104]

- Start here [105]
  - Self diagnostics [106]
  - Software updates [107]
  - If a full reset (restart) of the TV is required [108]
  - Frequently Asked Questions for Troubleshooting [109]
- Picture (quality)/screen [110]
  - No colour/Dark picture/Colour is not correct/Picture is too bright. [111]
  - Distorted picture./The screen flickers. [112]
  - The screen suddenly changes to a video you do not recognise while watching TV. [113]
  - There are banners/tickers at the top or bottom of the screen. [114]
  - High resolution HDR pictures are not displayed. [115]
  - A message about an app asking for permission to access a TV function is displayed. [116]
  - OLED panel (only models equipped with an OLED panel) [117]
    - The screen becomes darker after a certain period of time. (only models equipped with an OLED panel) [118]
    - The message [Panel refresh did not finish] is displayed. (only models equipped with an OLED panel) [119]
    - You are concerned about an image retention. (only models equipped with an OLED panel) [120]
    - A white line appears on the screen. (only models equipped with an OLED panel) [121]
- Keyboard [122]
- Broadcast reception [123]
  - Check these things first to troubleshoot your TV reception. [124]
  - Block noise or an error message appears and you cannot watch broadcasts. [125]
  - Ghosting or double images appear. [126]
  - Only snow noise or a black picture appears on the screen. [127]
  - There is picture or sound noise when viewing an analogue TV channel. [128]
  - Some channels are blank. [129]
  - Poor reception or poor picture quality with digital broadcasts. [130]
  - You cannot view digital channels. [131]
  - Not all analogue channels are tuned. [132]
  - You cannot view satellite channels. [133]
  - Some digital channels are missing. [134]
  - You want to tune your satellite dish. [135]

- Sound [136]
  - No sound but good picture. [137]
  - Audio noise. [138]
  - No audio or low audio with a home theatre system. [139]
  - Distorted sound. [140]
  - You want to output sound from the headphones/Bluetooth audio device and audio system/TV speakers at the same time. [141]
  - You are concerned about a delay between the picture and sound. [142]
  - No TV sounds such as operation sound or audio response. [143]
  - You cannot establish an eARC connection. [144]
  - You cannot use voice search with the built-in MIC (only TVs with a built-in MIC). [145]
  - You can hear a slight noise from the TV speakers (only models with TV centre speaker mode). [146]
- Network (Internet/home)/apps [147]
  - The TV cannot connect to the Internet/Network. [148]
  - The picture and/or sound quality from streaming apps is poor. [149]
  - Your TV cannot connect to the server. [150]
  - You can connect to the Internet, but not to certain apps and services. [151]
- Remote control/accessories [152]
  - The remote control does not operate. [153]
  - You want to disable the remote control backlight. (only remote controls that feature backlight) [154]
- Power [155]
  - The TV cannot be turned off using the remote control. [156]
  - The TV turns off automatically. [157]
  - The TV turns on automatically. [158]
  - After turning on the TV, it turns off immediately. (only models equipped with an OLED panel) [159]
  - The TV does not turn on. [160]
- Connected devices [161]
  - No picture from a connected device. [162]
  - You cannot select a connected device. [163]
  - Certain programmes on digital sources display a loss of detail. [164]
  - Photo images or folders take time to display. [165]
  - You cannot find a connected BRAVIA Sync HDMI device. [166]
  - You cannot turn off the TV box using the TV's remote control. [167]

- An external device (such as a TV box) cannot be controlled using the TV's remote control. (TV box control compatible models only) [168]
- Some media files in the USB device or server are not displayed. [169]
- Operation cuts out, or a device does not work. [170]
- Some paid content cannot be played. [171]

- USB HDD recording [172]
  - You cannot use a USB HDD device. [173]
  - The USB HDD device cannot be registered. [174]
  - Recording cannot be performed./Recording failed. [175]
  - Recorded content disappeared. [176]
  - You want to delete recorded content, but the delete icon is not displayed. [177]
  - The USB HDD device operates even though it is not turned on. [178]
- LED [179]
  - You want to disable the LED so that it does not light up or blink. [180]
  - The Operational response LED blinks in red. [181]

Index/Other [182]

- Index [183]
- Using the Help Guide [184]
- Specifications [185]
- Support Site [186]
- Keeping the TV updated [187]
- Trademark information [188]

---

[1]

Getting Started

Remote control This section explains the remote control buttons in three separate blocks.

Connecting terminal

How the LEDs light up

Home menu

Selecting inputs

Performing acoustic auto calibration

Accessibility features

---

[2] Getting Started

Remote control

Upper buttons on the remote control
Middle buttons on the remote control
Lower buttons on the remote control

[3] Remote control | Remote control

Upper buttons on the remote control

The included remote control, as well as the layout of the buttons, button names, and available services, vary depending on your model/country/region.

(MIC)
Speak into here to use the microphone in the remote control. There is an LED above the microphone.

(Power)
Turns on or switches to standby/networked standby mode.

Number Button
Use with the 0-9 buttons to select digital channels.

(Text)
Display text information.

(Info/Text reveal)
Display information.

YouTube™
Access the “YouTube™” online service.

Disney+
Access the “Disney+” online service.

NETFLIX
Access the “NETFLIX” online service.

Prime Video
Access the “Prime Video” online service.

Related topics

- Middle buttons on the remote control
- Lower buttons on the remote control

[4] Remote control | Remote control

Middle buttons on the remote control

The included remote control, as well as the button icons, vary depending on your model/country/region.

Colour buttons

Execute corresponding function at that time.

GUIDE

Display the digital programme guide of TV or TV box. For details, refer to Using the programme guide page.

REC LIST

Display the Rec list of USB HDD, or DVR after setting [TV box setup].

(Input select)

Display and select the input source, etc. For details, refer to Selecting inputs page.

(Microphone)/ (Google Assistant)

Talk to Google Assistant or search for various content with your voice. Google Assistant is not available in certain languages and countries.

For details, refer to Using the remote control microphone page.

(Quick Settings)

Display Quick Settings. For details, refer to Using the Quick Settings page.

(Up) / (Down) / (Left) / (Right) / (Enter) (Navigation D-Pad)

On screen menu navigation and selection.

BACK

Return to the previous screen.

HOME

Display the TV Home Menu. For details, refer to Home menu page.

TV

Switch to a TV channel or input and display the TV menu. For details, refer to Using the TV menu page.

Related topics

- Upper buttons on the remote control
- Lower buttons on the remote control

[5] Remote control | Remote control

Lower buttons on the remote control

The included remote control, as well as the layout of the buttons and the button names, vary depending on your model/country/region.

+/- (Volume)

Adjust the volume.

(Jump)

Jump back and forth between two channels or inputs. The TV alternates between the current channel or input and the last channel or input that was selected.

(Mute)

Mute the sound. Press again to restore the sound.

Hint

- The accessibility shortcut service can be turned on or off by pressing and holding (Mute).

CH +/- (Channel)

In TV mode: Select the channel.

In Text mode: Select the (Next) or (Previous) page.

AUDIO

Select multilingual source sound or dual sound for the programme currently being viewed (depending on programme source).

(Subtitle setting)

Turn subtitles on or off (when the feature is available).

HELP

Display the Help menu. Help Guide can be accessed from here.

◀◀ (Fast rewind) / ► (Play) / ▶▶ (Fast forward) / ❚❚ (Pause)

Operate media contents on the TV and connected BRAVIA Sync-compatible device.

REC

Record the currently viewed programme on the USB HDD, or DVR after setting [TV box setup] (only on limited region/country/TV model). Not available for Italy.

EXIT

Return to the previous screen or exit from the menu. When an Interactive Application service is available, press to exit from the service.

Related topics

- Upper buttons on the remote control
- Middle buttons on the remote control

[6] Getting Started

Connecting terminal

The types and shapes of connectors available vary depending on your TV.

For the location of the connectors, refer to the Setup Guide (printed manual).

Terminal	Description
	USB HDD REC Connects to the USB HDD device or Digital still camera/Camcorder/USB storage media. The USB HDD recording function is available only in limited regions/countries/TV models.
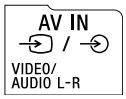	**AV IN** Connects to VCR/Video game equipment/DVD player/Camcorder/External Box.[*1] For a composite connection, use an Analogue Extension Cable (not supplied). [*1] For an external device which has only SCART AV OUT, use a SCART-RCA adaptor and Analogue Extension Cable. For more about the shape of the Analogue Extension Cable, refer to Connecting a Blu-ray or DVD player.
	(Headphone) Connects to the headphone jack to listen to sound from the TV. Supports 3-pole stereo mini jack only. **Note** • You cannot output sound from both the headphone and the TV speakers at the same time.
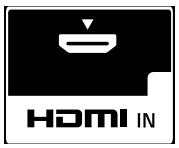	**HDMI IN** Connects to the HDMI device. The HDMI interface can transfer the digital video and audio on a single cable. To enjoy high quality 4K contents, connect a Premium High Speed HDMI™ Cable(s) and follow the instructions displayed on the screen to set the [HDMI signal format] of the HDMI IN port.

Terminal	Description
(8K, 4K 120 Hz) HDMI IN	**HDMI IN (8K, 4K 120 Hz)** If you use an HDMI device that supports video output in 8K or 4K 100/120 Hz, connect the Ultra High Speed HDMI™ Cable, and follow the instructions displayed on the screen to set the [HDMI signal format] of the HDMI IN port. **Note** • 4K 100 Hz support depends on your country/region.
(4K 120 Hz) HDMI IN	**HDMI IN (4K 120 Hz)** If you use an HDMI device that supports video output in 4K 100/120 Hz, connect the Ultra High Speed HDMI™ Cable, and follow the instructions displayed on the screen to set the [HDMI signal format] of the HDMI IN port. **Note** • 4K 100 Hz support depends on your country/region.
(eARC/ARC) HDMI IN	**HDMI IN (eARC/ARC)** To connect an audio system that supports eARC (Enhanced Audio Return Channel) or ARC (Audio Return Channel), connect to the HDMI port labelled “eARC/ARC” on the TV. It is a feature that sends audio to an audio system that supports eARC/ARC through an HDMI cable. If the audio system does not support eARC/ARC, you need to connect with DIGITAL AUDIO OUT (OPTICAL). **Note** • When connecting with eARC, use an HDMI cable with Ethernet.

Terminal	Description
	DIGITAL AUDIO OUT (OPTICAL) Connects to an audio system with optical audio input. When connecting an audio system not compatible with ARC using an HDMI cable, you need to connect an optical audio cable to the DIGITAL AUDIO OUT (OPTICAL) to output digital sound.
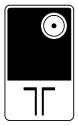	**(RF input)** Connects to Cable/Antenna/External Box. **Note** • When connecting the cable to the Cable/Antenna input, finger tighten only, over tightening the connection can damage the TV.
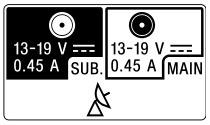	**(Satellite input)** Connects to satellite input. Connection steps: SUB. → MAIN → Antenna. For SUB. jack, connect only when you are using twin tuner mode except for Single Cable Distribution EN50494 (depends on model).
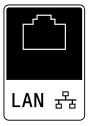	**LAN** Connect to a Router. Connect to the Internet using a LAN cable.

Terminal	Description
	CAM (Conditional Access Module) Provides access to pay TV services. For details, refer to the instruction manual supplied with your CAM. **Note** • Do not insert the smart card directly into the TV CAM slot. It must be fitted into the Conditional Access Module provided by your authorised dealer. • CAM is not supported in some countries/areas. Check with your authorised dealer. • A CAM message may appear when you switch to a digital programme after using the Internet video. • Do not remove the dummy card or cover (availability depends on TV model) from the TV CAM slot other than to insert a smart card fitted in CAM.
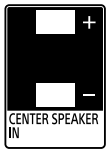	**CENTER SPEAKER IN** To use your TV speakers as the centre speaker, connect the output of your AV receiver to the CENTER SPEAKER IN on your TV. To use your TV speakers as the centre speaker, press the ⚙ (Quick Settings) button on the remote control, and set [Speakers] to [Audio system] from [Settings] — [Display & Sound] — [Audio output]. **Note** • Before connecting cables, disconnect the AC power cord (mains lead) of both the TV and AV receiver. • If you do not use the CENTER SPEAKER IN terminal or the S-CENTER SPEAKER IN terminal, you will need to perform the following steps to prevent noise from the speakers. Press the ⚙ (Quick Settings) button on the remote control, and disable [TV centre speaker mode] in [Settings] — [Display & Sound] — [Audio output].

Terminal	Description
S-CENTER SPEAKER IN	**S-CENTER SPEAKER IN** Connects the TV and an audio device with an S-CENTER OUT terminal using a TV centre speaker mode cable. Before connecting, make sure you unplug the AC power cord (mains lead) of the TV and audio device to be connected. For details, refer to Using the TV as a centre speaker (only models with TV centre speaker mode). **Note** • If you do not use the CENTER SPEAKER IN terminal or the S-CENTER SPEAKER IN terminal, you will need to perform the following steps to prevent noise from the speakers. Press the (Quick Settings) button on the remote control, and disable [TV centre speaker mode] in [Settings] — [Display & Sound] — [Audio output].

[7] Getting Started

How the LEDs light up

You can check the status of the TV by looking at how the LEDs light up.

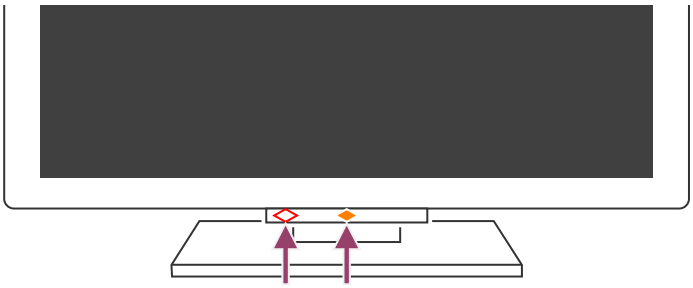

(A) Voice function LED (On the left side at the bottom of the TV. Only TVs with a built-in MIC.*)
(B) Operational response LED (In the centre at the bottom of the TV.)

* The built-in MIC may not be available depending on your region/country/language.

Voice function LED

Turns “on” or “blinks” when “Ok Google” is detected and the TV is communicating with the server. The lighting pattern of this LED depends on the server communication status.

Note

- You can use the built-in MIC when the Built-in MIC switch is on. For the location of the Built-in Mic Switch, refer to the Reference Guide supplied with the TV.
- After you press the MIC/Google Assistant button on the remote control and finish activating the built-in MIC, the voice function LED turns on in amber when the Built-in MIC switch is off (when on, the Operational response LED turns on in amber).

Operational response LED

Turns “on” or “blinks” in white when the TV is turning on, when receiving signals from the remote control, or when updating the software using a USB storage device.
When ["Ok Google" detection] is enabled, it turns “on” in amber. (only TVs with a built-in MIC*)
* The built-in MIC may not be available depending on your region/country/language.
When the Built-in MIC switch is on, it turns “on” in amber. (only TVs with a built-in MIC*)
* The built-in MIC may not be available depending on your region/country/language.

Related topics

- Using the built-in MIC (only TVs with a built-in MIC)
- You want to disable the LED so that it does not light up or blink.
- Home network features
- Software updates

[8] Getting Started

Home menu

The screen displayed when you press the HOME button on the remote control is called the Home Menu. From the Home Menu, you can search for content and select recommended content, apps, and settings.

The displayed Home Menu depends on whether a Google Account is added to the TV. (Some features do not apply depending on your model/region/country. The images are for reference only. They may differ from the actual screen.)

(A) The Home Menu when a Google Account is set on the TV

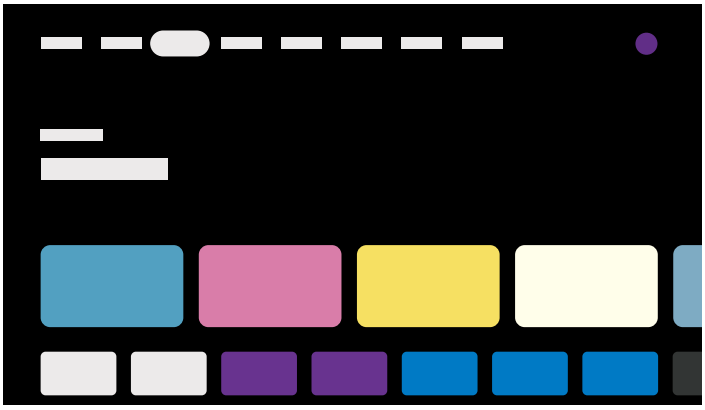

(B) The Home Menu when a Google Account is not set on the TV

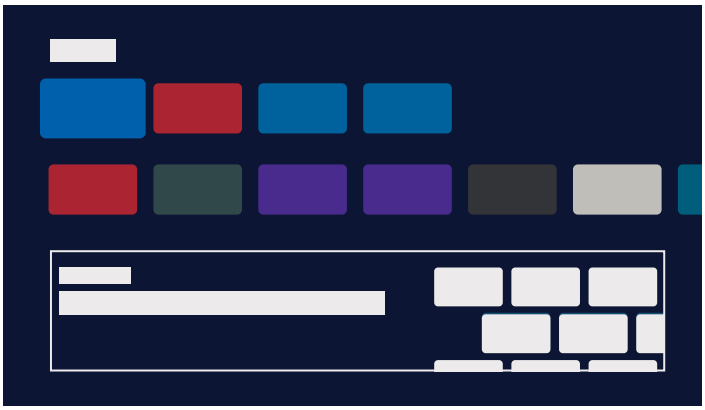

Setting a Google Account and enjoying the TV

If you connect the TV to the Internet and set a Google Account, you can install desired apps on the TV and enjoy Internet videos or use your voice to search for content.

Enjoying the TV without setting a Google Account

Even if you do not set a Google Account, you can watch TV broadcasts or connect devices such as Blu-ray player. If you connect the TV to the Internet, you can also use the Internet streaming services displayed in the Home Menu.

Note

- To set a Google Account later and enjoy the TV, set up Google TV from the Home Menu or settings menu.
- If you delete the Google Account, the TV will return to the factory default settings.

Hint

- Depending on the TV settings, the Home screen will be displayed when the TV is turned on. If you change the following setting, you can change the screen that is displayed when the TV is turned on to the TV broadcast channel or external input such as HDMI that you were watching before turning off the TV.

1. **Press the ⚙ button on the remote control.**
2. **Select [Power-on behaviour], and then select [Last input].**

The next time the TV is turned on, the TV broadcast channel or external input such as HDMI that you were watching before turning off the TV will be displayed.

Specifications may be subject to change without notice.

- For other information, see “Frequently Asked Questions” on the Sony Support Site.
  Frequently Asked Questions for Troubleshooting

[9] Getting Started

Selecting inputs

To use devices (such as a Blu-ray/DVD player or USB flash drive) connected to the TV, or to watch TV after such use, you will need to switch the input.

If you edit the items and add apps, you will be able to switch to those apps in the input selection screen.

1. **Press the (Input select) button repeatedly to select the connected device. Alternatively, press the (Input select) button, use the ◀ (Left) / ▶ (Right) buttons to select a connected device, and then press the (Enter) button.**

Note

- If there are no devices connected to an HDMI input, the HDMI input may not be displayed in the [Input menu].

To edit the input items

1. **Press the (Input select) button.**
2. **Press the ▶ (Right) button (or ◀ (Left) button depending on the TV's display language) and select (Edit).**
3. **Select the app/input/device you want to show or hide.**
4. **Select [Close].**

Hint

- To change the order or hide a displayed item, press the ▲ (Up) button on the remote control with that item highlighted, and [Move] and [Hide] will be displayed. If you select [Move], use ◀ (Left) / ▶ (Right) on the remote control to move the item to the desired position, and then press the ⊹ (Enter) button on the remote control.
- You can switch to TV broadcasting by simply pressing the TV button on the remote control.

[10] Getting Started

Performing acoustic auto calibration

You can correct the audio to the best acoustics for your watching environment by using the remote control microphone to measure a test sound from the TV. (This setting may not be available depending on the model.)
Models that support acoustic auto calibration have the following setting.
[Settings] — [Display & Sound] — [Sound] — [Acoustic auto calibration]

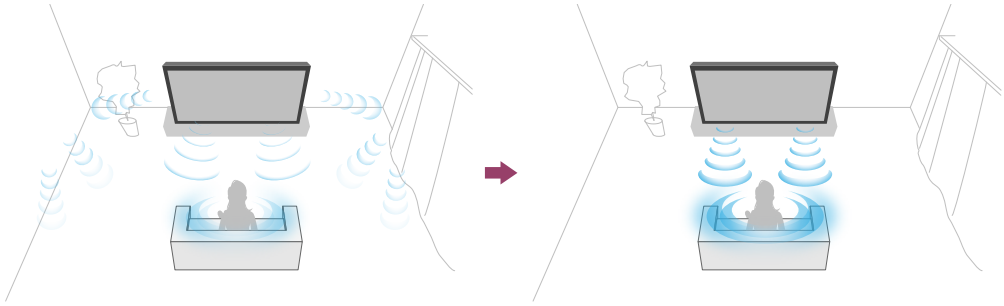

Note

- Calibration effects will vary depending on your watching environment.
- A loud test sound will be played from the TV during measurement.
- Do not block the microphone opening at the end of the remote control during measurement.
- Do not move the remote control during measurement. Doing so may result in incorrect measurement.
- Perform the calibration when your surroundings are quiet. Noise may result in incorrect measurement.
- Acoustic auto calibration cannot be performed if you are using a sound bar. Change the following setting.
  [Settings] — [Display & Sound] — [Audio output] — [Speakers] — [TV speakers]

1. **Press the ⚙ (Quick Settings) button on the remote control, then select the following settings.**
   [Settings] — [Display & Sound] — [Sound] — [Acoustic auto calibration] — [Calibration setup]

2. **Measure by following the on-screen instructions.**
   The acoustics will be corrected automatically based on the measurement results of your watching environment.

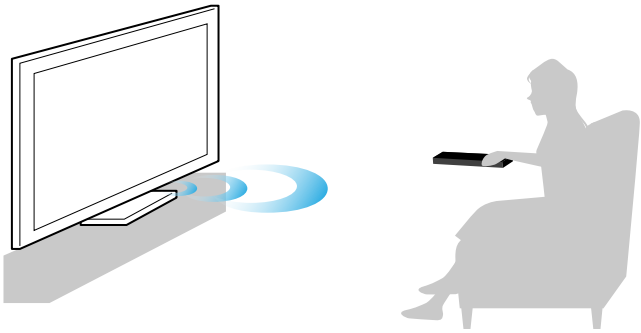

Hint

Acoustic auto calibration may fail in the following cases.

- If the remote control is moved during measurement
- If there are sounds other than the test sound (such as noise) during measurement

---

[11] Getting Started

Accessibility features

This TV has accessibility features in [Accessibility] such as a text-to-speech function for on-screen text, zooming to make text easier to read, and subtitles.

Note

- Some features do not apply depending on your model/region/country.

Press the ⚙ (Quick Settings) button on the remote control, then select [Settings] — [System] — [Accessibility] to configure the user assistive features.

[Accessibility] has a shortcut function so you can turn it on or off by pressing and holding the 🔇 (Mute) button on the remote control for 3 seconds.

Hint

- To change the shortcut function, select [Accessibility shortcut] in [Accessibility], enable [Enable accessibility shortcut], and change the function in [Shortcut service].
- If you select [Accessibility tutorial] in [Accessibility], you can learn about user accessibility features supported by the TV. (This feature is not available depending on your model.)
- To use text-to-speech with the Help Guide, view the Help Guide in the Sony support website using a computer or smartphone.

  http://www.sony.eu/support/

[12]

Useful features

Searching for content/operating the TV with your voice
Enjoying preferred apps
Enjoying safe apps and video streaming services (Security and restrictions)

[13] Useful features

Searching for content/operating the TV with your voice

Using the remote control microphone This feature is available for TVs in which the included remote control has a MIC button.
Using the built-in MIC (only TVs with a built-in MIC)

[14] Searching for content/operating the TV with your voice | Searching for content/operating the TV with your voice

Using the remote control microphone

Remote controls that support voice search have a MIC button, and a built-in microphone. By speaking into the microphone, you can search for various content.

1. **Press and hold the MIC/Google Assistant button on your remote control.**
   The microphone on the remote control will be activated while the button is pressed, and the LED on the remote control will light up.

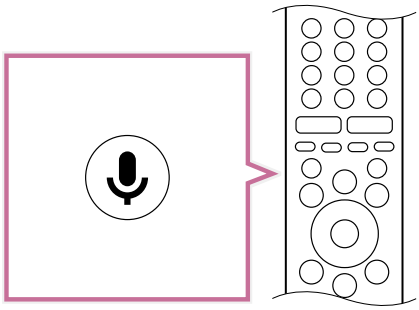

2 **Speak into the microphone while pressing the MIC/Google Assistant button.**
Speech examples may be displayed depending on your model.

Search results are displayed when you speak into the microphone.

Note

- An Internet connection is required to use voice search.
- The type of remote control supplied with the TV, and the availability of a remote control with a built-in microphone varies depending on your model/region/country. An optional remote control is available in some models/regions/countries.
- To use the microphone on the remote control, you must add and set a Google Account to the TV.

---

[15] Searching for content/operating the TV with your voice | Searching for content/operating the TV with your voice

Using the built-in MIC (only TVs with a built-in MIC)

The built-in MIC may not be available depending on your region/country/language.

For details about languages that support the built-in MIC feature, refer to the following Sony support website.

https://www.sony.net/tv-hf/aep/

Hint

- The URL is subject to change without notice.

You can do the following hands-free when you face the TV and say “Ok Google”.

- Voice search
- TV operation

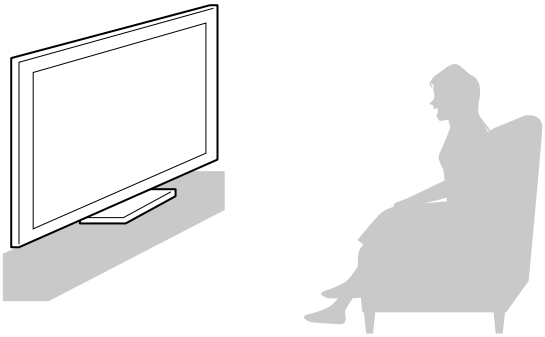

Face the TV and say, “Ok Google”.

When the voice function LED blinks white, start speaking to the TV.

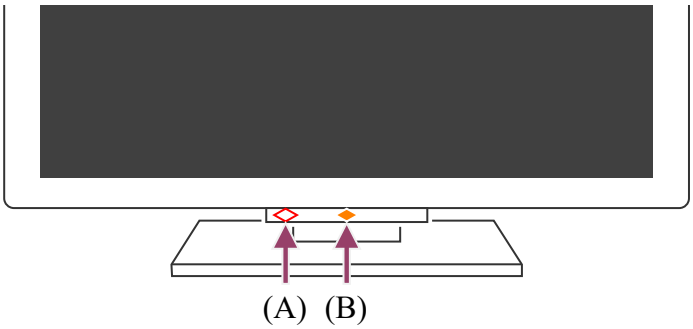

(A) The voice function LED is located at the bottom just left of centre of the TV.
(B) The LED located at the bottom centre of the TV lights up amber when hands-free operation is available.

1 **Turn on the Built-in MIC switch.**
For the location of the Built-in MIC switch, refer to the Reference Guide.

Note

- An Internet connection is required to use the built-in MIC.
- After turning on the Built-in MIC switch, you need to press the MIC/Google Assistant button on the remote control to complete the setup, depending on your model/country/region.

Hint

- When the built-in MIC is enabled, the Operational response LED lights up in amber even when the TV is turned off (you can also set it so it does not light up).

Related topics

- Connecting to a Network
- How the LEDs light up
- You want to disable the LED so that it does not light up or blink.

[16] Useful features

Enjoying preferred apps

Installing apps

[17] Enjoying preferred apps | Enjoying preferred apps

Installing apps

You can install apps to the TV, just like you do with smartphones and tablets.

Note

- You can only install apps that are compatible with TVs. They may differ from apps for smartphones/tablets.
- An Internet connection and Google Account are required to install apps.

Hint

- If you do not have a Google Account or want to create a shared account, create a new account by accessing the following website.
  https://accounts.google.com/signup
  The website above may vary depending on your region/country. It is also subject to change without notice. For details, refer to the Google homepage.
- We recommend that you create a Google Account on a computer or mobile device.

1. **Press the HOME button, and from [Search] on the Home screen, say something like “Search for <app name> apps” to search for apps you want to install. Alternatively, select the input field and use the on-screen keyboard.**

2. **Select an app from the search results and install it.**

Hint

- If the app search does not produce desired results, select [Search for apps] from the apps tab in the Home Menu.
- You can also select a category from the Apps tab in the Home Menu and select a desired app.

After downloading, the app is automatically installed and added. You can select [Open] to start the app.

Hint

- To start an installed app later, select the Apps tab in the Home Menu, and select [See all] at the right edge of the app area. Select the installed app to start it.

About paid apps

There are free apps and paid apps. To purchase a paid app, a prepaid Google Play gift card code or credit card information is required. You can purchase a Google Play gift card from various retailers.

To delete an app

1. **Press the ⚙ (Quick Settings) button on the remote control, select [Settings] — [Apps], select an app to be deleted, and uninstall it.**

Related topics

- Connecting to a network using a LAN cable
- Using Wi-Fi to connect the TV to the Internet/Network

---

[18] Useful features

Enjoying safe apps and video streaming services (Security and restrictions)

You can ensure safe use of the TV by setting installation restrictions on apps that are downloaded from unknown sources, or age restrictions on programmes and videos. (Some features do not apply depending on your model/region/country.)

You can set the following [Parental controls] features so that children can safely use the TV.

- Restrict TV channels and use of external inputs

- Restrict installation of apps from unknown sources
- Restrict use of apps (password lock feature)
- Restrict TV usage time

You can use restriction features by setting the following.

To set age restrictions on programmes

1. **Press the ⚙ button on the remote control, and then select the following in order.**
   [Settings] — [System] — [Parental controls] — [Channels & External inputs] — [TV rating].
   The options depend on your model, country, region, and settings.

To restrict apps (password lock feature)

Set to restrict children from using apps such as internet browsers.

Restrictions are set in [Parental controls].

If this is set, you will be required to input the PIN when starting an app.

1. **Press the ⚙ button on the remote control, and select the following in order.**
   [Settings] — [System] — [Parental controls] — [Apps]
2. **Set or input the PIN.**
3. **Enable [Restrict apps].**
4. **Select the apps that you want to restrict from the app list.**
   Restricted apps will change from 🔓 (Unlocked) to 🔒 (Locked). To restrict all apps, select [All apps].

To restrict the installation of apps from unknown sources

If this is set, there will be fewer items displayed in the Home Menu and settings menu.

1. **Press the ⚙ button on the remote control, and select the following in order.**
   [Settings] — [Privacy] — [Security and restrictions] — [Unknown sources] — change the setting in [Install unknown apps].

Note

- If you change the [Security and restrictions] settings, your device and personal data are more vulnerable to attack by unknown apps from sources other than Play Store. You agree that you are solely responsible for any damage to your device or loss of data that may result from using these apps.
- If you forget the restricted profile PIN, you must reset the TV to its original factory settings. Make sure you do not forget the PIN.

Hint

- Other separate restrictions may be available depending on the app. For details, refer to the app's Help.

To restrict usage time of the TV

Set to restrict the time in which children use the TV.

1. **Press the ⚙ button on the remote control, and select the following in order.**
   [Settings] — [System] — [Parental controls] — [Screen time]

2. **Set or input the PIN.**

3. **Enable [Restrict screen time] to start restriction.**
   The restriction setting will be displayed under [Restrict screen time]. To change the setting, set it in [Usage time limit] or [Restricted time slot].

[19]

Watching TV

Watching TV programmes
Useful features when watching TV
Changing the picture and sound quality to your preferences

[20] Watching TV

Watching TV programmes

Understanding the information banner icons
Using the programme guide
Configuring channel settings
Using the TV menu
Using interactive broadcast TV services

[21] Watching TV programmes | Watching TV programmes

Understanding the information banner icons

When changing the channel, an information banner appears briefly. The following icons may appear in the banner.

:Data service (Broadcast application)
:Radio service
:Scrambled/Subscription service
:Multilingual audio available
:Subtitles available
:Subtitles and/or audio available for the hearing impaired
:Recommended minimum age for current programme(from 3 to 18 years)
:Parental lock
AD **:**Audio available for the visually impaired
:Spoken subtitle audio available
:Multi-channel audio available

Related topics

- Using interactive broadcast TV services
- Channels & Inputs

[22] Watching TV programmes | Watching TV programmes

Using the programme guide

You can quickly find your preferred programmes.

1. **Press the GUIDE button to display the digital programme guide.**

2. **Select a programme to watch.**
   The details of the programme are displayed.

3 **Select [View] to watch the programme.**

Hint

- (TV box control compatible models only) If you perform the [TV box control setup] setting in [TV box setup] under [External inputs], you can display the programme guide of the TV box.
- If you have the YouView app, you can press the GUIDE button on the remote control while watching YouView to display the YouView Guide. (U.K. models only)

Related topics

- How to control the TV box using the TV remote control
- An external device (such as a TV box) cannot be controlled using the TV's remote control. (TV box control compatible models only)

---

[23] Watching TV programmes | Watching TV programmes

Configuring channel settings

Receiving digital broadcasts
Receiving satellite broadcasts
Sorting or editing the channels

---

[24] Configuring channel settings | Configuring channel settings | Configuring channel settings

Receiving digital broadcasts

1 **Press the ⚙ (Quick Settings) button on the remote control, then select [Settings] — [Channels & Inputs] — [Channels] — [Channel setup] — [Auto tuning].**

2 **Follow the on-screen instructions to tune in all available digital channels and store them in the TV.**

To change the tuning range

Press the ⚙ (Quick Settings) button on the remote control, then select [Settings] — [Channels & Inputs] — [Channels] — [Channel setup] — [Advanced settings] — [Tuning

range] — [Normal] or [Extended].

[Normal]

Searches for available channels within your region/country.

[Extended]

Searches for available channels regardless of region/country.

Hint

- You can retune the TV by selecting [Auto tuning] and following the on-screen instructions after moving to a new residence, changing service providers, or to search for newly launched channels.

Related topics

- Some digital channels are missing.

[25] Configuring channel settings | Configuring channel settings | Configuring channel settings

Receiving satellite broadcasts

If you have a satellite dish installed, you can view satellite broadcasts by configuring the tuner settings.

1. **Press the ⚙ (Quick Settings) button on the remote control, then select [Settings] — [Channels & Inputs] — [Channels] — [Channel setup] — [Auto tuning] — [Set up] for subscribed satellite broadcasts.**
2. **Follow the on-screen instructions.**

Related topics

- You cannot view satellite channels.

[26] Configuring channel settings | Configuring channel settings | Configuring channel settings

Sorting or editing the channels

You can sort the channel display according to your preferred order.

1. **Press the ⚙ (Quick Settings) button on the remote control, then select [Settings] — [Channels & Inputs] — [Channels] — [Channel list edit]. If multiple items are displayed, select the one you want to edit.**

2. **Choose the channel you want to move to a new position.**
   You can select to [Insert] or [Swap] the selected channel. To change it, select [Sorting type].
   You can press the yellow button to select multiple channels.

3. **Choose the new position where you want to move the selected channel.**

4. **Select [Done] to apply the changes.**

Note

- Available options may vary depending on your region/country.

---

[27] Watching TV programmes | Watching TV programmes

Using the TV menu

Press the TV button while watching a TV broadcast to display the [TV menu]. A channel list is displayed in [TV menu] and you can easily select programmes on other channels while watching TV.

You can add favourite channels when using the built-in tuner.

Note

- The displayed screen and menus may vary depending on what you are watching and your model/country/region.

1. **Press the TV button while watching a TV broadcast.**
   The TV menu is displayed at the bottom of the screen.

2 **Move the focus left or right and select the programme you want to watch.**
If you move the focus down and select [TV control] or [Remote control], options available while you are watching will be displayed. You can also select options such as [Digital] or [Cable] to change the displayed Channel list. (The displayed options vary depending on what you are watching.)

Hint

- To add the channel you are watching to favourites, press the ▲ (Up) button on the remote control from the [TV menu] and add the channel to favourites from the displayed menu.
- If you have the YouView app, you can press the TV button on the remote control to launch YouView. (U.K. models only)
- You can also use the TV button on the remote control to display the channel list of the TV box by following the procedure below.

  Press the ⚙ (Quick Settings) button on the remote control, then select [Settings] — [Channels & Inputs] — [TV button shortcut].

  Then, select the input that is connected to the TV box.

- If you configured a TV box in the initial setup, you can press the TV button to display the channel list of the TV box.

  You can also operate the TV box with the control panel displayed when you select [Remote control].

  TV box control compatible models have [TV box setup] in [Settings] — [Channels & Inputs] — [External inputs].

---

[28] Watching TV programmes | Watching TV programmes

Using interactive broadcast TV services

To display text information

You can view text and text-based graphical information, including national news, weather information, and TV schedules. You can browse for information that interests you, and then select what information you want to display by entering a number.

1 **Press the (Text) button to display text information.**

About the Digital Text Information Service

The digital text service offers rich content with smooth graphics and images. Various features are available, such as page links and easy-to-use navigation. The service is supported by numerous broadcasters. (The availability of this feature depends on your model/region/country.)

About the Digital Interactive Application Service

The interactive application service offers high-quality digital text and graphics, along with advanced options. The service is supported by broadcasters. (The availability of this feature depends on your model/region/country.)

Note

- The interactive service is only available if provided by the broadcaster.
- Available functions and screen content varies depending on the broadcaster.
- If subtitles are selected and you launch a digital text application via the (Text) button, subtitles may, under certain circumstances, stop being displayed. When you exit the digital text application, subtitle display will resume automatically.

[29] Watching TV

Useful features when watching TV

Timers

Use a timer to turn the TV on and off.

For details, refer to Timers & Clock.

Parental lock

Use [Parental controls] to set parental restrictions.

For details, refer to System.

(Subtitle setting)

Change the subtitle display by pressing the (Subtitle setting) button when watching content with available subtitles.

Picture quality/sound quality adjustment

Adjust the picture quality and sound quality according to your preferences.

For details, refer to Display & Sound.

[30] Watching TV

Changing the picture and sound quality to your preferences

Adjusting the picture quality
Adjusting the sound quality
“Sound” advanced settings

[31] Changing the picture and sound quality to your preferences | Changing the picture and sound quality to your preferences

Adjusting the picture quality

You can configure various settings related to the TV display such as colour and brightness for picture quality, or screen size.

Note

- The actual display may vary or some settings may not be available depending on your model/country/region and the content you are watching.

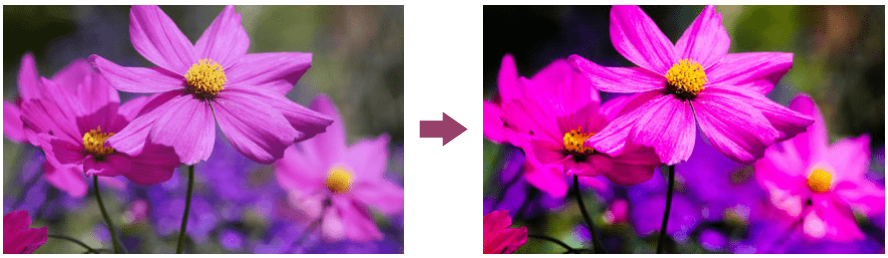

Press the ⚙ (Quick Settings) button on the remote control, then select [Settings] — [Display & Sound] — the desired option.

You can change the following settings.

Picture

Adjust the picture settings such as Brightness, Colour, and Hue.

Basic

You can set the following.

Picture mode

Change the picture quality according to the content you are watching such as movies or sports.

Reset picture settings for *

Reset the picture settings for the current picture mode to the factory default.

Auto picture mode

Automatically selects the picture mode based on the content being viewed.

***** calibrated mode**

Adjusts the picture to a quality close to that intended by the content creator when watching supported video streaming content and supported apps.

Light sensor

Optimises brightness according to ambient light.

Ambient light sensor

Automatically adjusts the brightness and colour of the picture based on the surrounding ambient light.

Brightness

Adjust the backlight to display the brightest whites and deepest blacks.

Colour

Adjust the colour saturation level and Hue.

Clarity

Adjust the picture clarity and reduce roughness.

Motion

You can set the following.

Motionflow

Refines moving images. Increases the number of image frames to display videos smoothly. If you select [Custom], you can adjust [Smoothness] and [Clearness].

Film mode

Optimises picture quality based on video content, such as movies and computer graphics. Smoothly reproduces the motion of filmed images (images recorded at 24 frames per second) such as movies.

Video signal

You can set the following.

HDR mode

Picture that is suitable for a High Dynamic Range signal.

HDMI video range

Select the signal range for HDMI input.

Colour space

Change the colour reproduction range.

Adv. colour adjustment

You can set the following.

Adv. colour temperature: Basic

Finely adjust the colour temperature for each colour.

Adv. colour temperature: Multi point (***p)

Optimally preset at shipping. Use this setting for professional adjustment. When adjusting, we recommend using a colour analyser.

Per colour adjustment

Adjust Hue, Saturation, and Lightness for each colour.

Screen

Adjust the aspect ratio and viewable screen area.

Wide mode

Adjust the picture size.

4:3 default

Automatic sizing for 4:3 pictures.

Auto display area

Automatically adjusts the viewable screen area based on the signal.

Display area

Adjust the viewable screen area.

Screen position

Adjust the vertical and horizontal screen position.

Vertical size

Stretch the picture vertically.

---

[32] Changing the picture and sound quality to your preferences | Changing the picture and sound quality to your preferences

Adjusting the sound quality

You can configure various settings related to the TV’s sound such as sound quality and sound mode.

Note

- The actual display may vary or some settings may not be available depending on your model/country/region, TV settings, and the connected device.

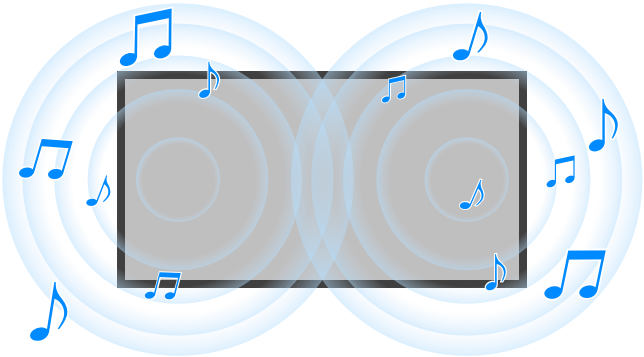

Press the ⚙ (Quick Settings) button on the remote control, then select [Settings] — [Display & Sound] — the desired option.

You can change the following settings.

Sound

Adjust settings by input such as the TV or HDMI, and other common settings, to enjoy various sound effects.
You can configure settings such as those below.

Sound mode

Select modes such as [Cinema], [Music], or [Dolby Audio] based on your environment and preferences.

Sound customisation

Adjust the sound quality for each sound mode in models with Sound mode.

Volume level

Adjust the sound level of current input.

Advanced auto volume

Keeps the volume level constant for all programmes and inputs.

Balance

Adjust the speaker balance.

TV position

Output sound from the TV speakers according to the position of the TV.

Acoustic auto calibration

Adjust audio output based on your watching environment. For details, refer to Performing acoustic auto calibration.

Reset

Return all sound settings to factory default settings.

Audio output

Adjust for headphones and audio system.

You can configure settings such as those below.

Speakers

Select TV or external speakers.

TV centre speaker mode

Use the TV speakers as the centre speaker of the home theatre system.

Audio system prioritisation

If enabled, this automatically switches the audio output to a BRAVIA Sync-compatible audio system when the TV is turned on.

Home theatre control

Turns your audio system on, and allows you to control it.

Sound mode sync

The sound field of the specified audio system will switch automatically when the TV's sound mode changes.

A/V sync

Adjust audio and video timing while using a Bluetooth A2DP audio device or a specific audio system connected with an HDMI cable.

eARC mode

If [Auto] is selected, high quality audio is output when an eARC supported device is connected to an HDMI port labelled “eARC/ARC”.

Digital audio out

Configure the output method when outputting digital audio. This setting is available only when [Speakers] is set to [Audio system].

Digital audio out volume

Applied for PCM only. The volume levels between PCM and compressed audio will differ.

Dolby Digital Plus output

Select output for Dolby Digital Plus for audio systems supporting Dolby Digital Plus and ARC. If you use ARC and optical audio out, select [Dolby Digital]. (Dolby Digital Plus will be muted over optical audio out.)

Pass through mode

Output audio signals to an audio system without decoding.

---

[33] Changing the picture and sound quality to your preferences | Changing the picture and sound quality to your preferences

“Sound” advanced settings

This page introduces various settings for the features you can configure in [Sound].

Note

- The actual display may vary or some settings may not be available depending on your model/country/region, TV settings, and the connected device.

[Sound mode] settings

Setting	Description
Standard	Optimise sound quality for general content.
Dialogue	Suitable for spoken dialogue.
Cinema	Optimise surround sound for movies.
Music	Lets you experience dynamic and clear sound, like that of a concert.
Sports	Simulates the larger space of a stadium or other venue.
Dolby Audio	Output sound processed by Dolby acoustic technology.

[Sound customisation]

Setting	Description
Surround	Virtually reproduce realistic surround sound.
Surround effect	Adjust the surround sound effect.
Equaliser	Adjust sound based on different frequencies.
Voice Zoom	Emphasise voice.
Dialogue enhancer	Emphasise voice when [Sound mode] is set to [Dolby Audio].

[Volume level]

Setting	Description

Setting	Description
Volume offset	Adjust the sound level of the current input relative to other inputs.
Dolby Dynamic Range	Compensates for audio level difference between channels (only for Dolby Digital audio).
MPEG audio level	Adjusts MPEG audio sound level.
HE-AAC Dynamic Range	Compensates for audio level difference between channels (only for HE-AAC audio).
HE-AAC audio level	Adjusts HE-AAC audio sound level.

Related topics

- Adjusting the sound quality

[34]

Recording TV Programmes

Recording to a USB HDD device
Watching/deleting recorded content
Understanding the symbols displayed in the recorded title list

[35] Recording TV Programmes

Recording to a USB HDD device

Registering a USB HDD device
One-touch recording
Timer recording
Information about using a USB HDD device for recording

[36] Recording to a USB HDD device | Recording to a USB HDD device

Registering a USB HDD device

This function is available only in limited regions/countries/TV models.

USB HDD recording models have [Recording device setup] in [Settings] — [Channels & Inputs].

Connect and register a USB HDD device to your TV to record digital broadcasts.

Connect the USB HDD device to the TV's USB port labelled "HDD REC" (if there is a blue USB port, that port supports HDD recording).

(A) USB HDD device
(B) USB cable (not supplied)

1. **Connect a USB HDD device to the USB port (blue) labelled "HDD REC" on your TV.**
2. **Turn the USB HDD device on.**
3. **Wait until the screen [USB drive connected] is displayed.**
   If the message does not appear you can manually register the USB HDD device from the Settings menu.
4. **Select [Register for recording].**
5. **Follow the on-screen instructions to register the USB HDD device.**

Note

- If the message "Can't detect a USB HDD for recording" is displayed during registration in step 4, follow the instructions in the message and check that the USB HDD device for recording is connected to the USB port (blue).
  If the USB HDD device for recording is not recognised even after you have checked the connection, you must register the USB HDD device again because it has already been registered as a device for purposes other than recording. Refer to "The USB

HDD device cannot be registered." to register the USB HDD device again for recording.

To register a USB HDD device manually

1. **Press the ⚙ (Quick Settings) button on the remote control, and select the following.**
   [Settings] — [Channels & Inputs] — [Recording device setup] — [HDD registration].

To deregister a USB HDD device

1. **Press the ⚙ (Quick Settings) button on the remote control, then select [Settings] — [Channels & Inputs] — [Recording device setup] — [HDD deregistration] — the device to deregister.**

Related topics

- Information about using a USB HDD device for recording

---

[37] Recording to a USB HDD device | Recording to a USB HDD device

One-touch recording

This function is available only in limited regions/countries/TV models.

USB HDD recording models have [Recording device setup] in [Settings] — [Channels & Inputs].

1. **While viewing the programme to record, press the REC button.**
2. **In the displayed screen, set the end time for the recording.**

To stop recording manually

1. **Press the TV button, and select [TV control] or [Remote control].**
2. **Select [REC stop] on the displayed screen.**

Related topics

- Watching/deleting recorded content

[38] Recording to a USB HDD device | Recording to a USB HDD device

Timer recording

This function is available only in limited regions/countries/TV models.

USB HDD recording models have [Recording device setup] in [Settings] — [Channels & Inputs].

1. **Press the GUIDE button.**
2. **Select the desired programme in the programme guide, then select [Timer REC].**
3. **Select [Set Timer As an Event] or [Set timer].**

To manually set the timer by specifying date, time and channel

1. **Press the REC LIST button.**
2. **Select [Timer list/Timer settings] — [Set timer] — [Set timer manually].**
3. **Configure the timer setting.**
4. **Select [Set timer].**

To check, modify or delete timer settings

Checking, modifying, or deleting timer settings is performed in [Recording timer list].

1. **Press the REC LIST button.**
2. **Select [Timer list/Timer settings] — [Recording timer list], then change the settings.**

Hint

- Up to 32 timer settings can be created.
- If the recording fails, the reason will be listed in [Recording error list]. Press the REC LIST button, then select [Recording error list] in [Timer list/Timer settings].

- In the programme guide, you can move the focus to the desired programme and press the REC button to set the timer recording for the programme.

Note

- Timer recording will not work when the AC power cord (mains lead) is unplugged.

Related topics

- Watching/deleting recorded content

[39] Recording to a USB HDD device | Recording to a USB HDD device

Information about using a USB HDD device for recording

This function is available only in limited regions/countries/TV models.

USB HDD recording models have [Recording device setup] in [Settings] — [Channels & Inputs].

- The USB HDD device must be used exclusively for recording. Use a separate USB HDD device for viewing photos and videos.
- Only USB HDDs larger than 32 GB are supported.
- Connection of a USB HDD device via a USB hub is not supported. Connect the device directly to the TV.
- Any data stored in the USB HDD device will be erased when it is formatted during the registration process. The USB HDD device cannot be used with a PC once it has been registered to the TV. To enable use of the USB HDD device on a PC, format it on the PC. (Note that any data in the USB HDD device will be erased.)
- A maximum of 8 USB HDD devices can be registered.
- Only this TV will be able to play the data recorded on the USB HDD that has been registered to this TV.
- Recording is supported only for digital TV and radio broadcasts. Recording of data broadcasts is not supported.
- Scrambled/encrypted signals cannot be recorded.
- Recording cannot be performed in the following cases:
  - The TV cannot recognise the registered USB HDD device.
  - More than 1,000 programmes are recorded on the USB HDD device.
  - The USB HDD device is full.

- Automatic selection of the programme may not be possible while it is being recorded.
- Recording a programme is not possible unless its recording has been authorised.
- If using a Conditional Access Module (CAM), avoid using its parental rating protection, which may not work during recording. As an alternative, use programme block or the TV's own parental rating if it is supported by the broadcaster.
- In Norway, some programmes cannot be recorded due to legal restrictions.
- If the TV is subjected to impact during USB HDD recording, noise may occur in the recorded content.
- In no event shall Sony be liable for recording failure or any damage or loss of recorded content caused or associated with the TV's malfunction, signal interference, or any other problem.

[40] Recording TV Programmes

Watching/deleting recorded content

This function is available only in limited regions/countries/TV models.

USB HDD recording models have [Recording device setup] in [Settings] — [Channels & Inputs].

To watch recorded content

1. **Press the REC LIST button, then select the content to be watched.**

To delete recorded content

1. **Press the REC LIST button.**
2. **Select the (Delete icon) to the right of the programme you want to delete.**
   To delete multiple programmes, select (Delete multiple icon) to the right of all the programmes you want to delete, and then select (Delete icon).

For information about the meaning of the symbols in the recorded title list, see Understanding the symbols displayed in the recorded title list.

Related topics

- You want to delete recorded content, but the delete icon is not displayed.

[41] Recording TV Programmes

Understanding the symbols displayed in the recorded title list

This function is available only in limited regions/countries/TV models.

- :Unviewed recording
- :Protected recording
- :Currently recording

[42]

Using the TV with Other Devices

USB devices
Blu-ray and DVD players
TV box
Displaying the iPhone/smartphone or iPad/tablet app screen on the TV
Computers, cameras, and camcorders
Audio system (such as an AV receiver or sound bar)
Bluetooth devices
BRAVIA Sync-compatible devices
Viewing pictures in 4K from compatible devices
BRAVIA Connectivity Guide

[43] Using the TV with Other Devices

USB devices

Playing content stored on a USB device
Information about USB devices used for storing photos and music
Supported files and formats

[44] USB devices | USB devices

Playing content stored on a USB device

To record programmes to a USB storage device or watch recorded programmes, see Recording TV Programmes.

Connecting a USB device

Connect a USB storage device to the USB port of the TV to enjoy photo, music, and video files stored on the device.

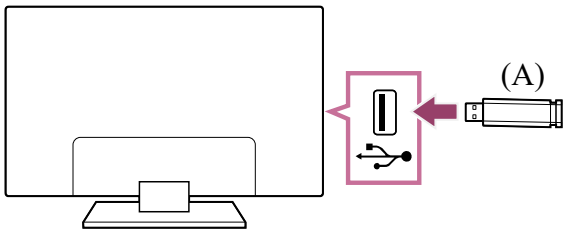

(A) USB storage device

Enjoy photos/music/movies stored on a USB device

You can enjoy photos/music/movies stored on a USB device on the TV screen.

1. **If the USB device connected to the TV has a power switch, turn it on.**
2. **Press the HOME button, and select [Media Player] from the Home menu.**
   If the supplied remote control has an APPS button, you can press the APPS button.
3. **Select the USB device name.**
4. **Select the folder, and select the file to play.**

To check the supported file formats

- Supported files and formats

Note

- Some photo images or folders take time to display depending on the image dimension, file size, and number of files in a folder.
- Displaying the USB device may take some time because the TV accesses the USB device every time the USB device is connected.
- All USB ports on the TV support Hi-Speed USB. The blue USB port supports SuperSpeed (USB 3.1 Gen 1 or USB 3.0). USB hubs are not supported.
- While accessing the USB device, do not turn off the TV or USB device, do not disconnect the USB cable, and do not remove or insert recording media. Otherwise,

data stored on the USB device may be corrupted.
- Depending on the file, playback may not be possible, even when using the supported formats.

Hint

- For other information, see “Frequently Asked Questions” on the Sony Support Site. Frequently Asked Questions for Troubleshooting

Related topics

- Information about USB devices used for storing photos and music
- No picture from a connected device.

[45] USB devices | USB devices

Information about USB devices used for storing photos and music

- The USB ports on the TV support FAT16, FAT32, exFAT, and NTFS file systems.
- When connecting a Sony digital still camera to the TV with a USB cable, USB connection settings on your camera need to be set to “Auto” or “Mass Storage” mode.
- If your digital still camera does not work with your TV, try the following:
  - Set the USB connection settings on your camera to “Mass Storage”.
  - Copy the files from the camera to a USB flash drive, then connect the drive to the TV.
- Some photos and movies may be magnified, resulting in low picture quality. Depending on the size and aspect ratio, images may not be displayed in full screen.
- It may take a while to display a photo, depending on the file and/or settings.
- In no event shall Sony be liable for recording failure or any damage or loss of recorded contents caused or associated with the TV’s malfunction, the USB device’s malfunction, or any other problem.

Related topics

- Supported files and formats

[46] USB devices | USB devices

Supported files and formats

Photos
Music
Videos
Audio sampling rates (for videos)
External subtitles

---

[47] Supported files and formats | Supported files and formats | Supported files and formats

Photos

Use case : USB / Home Network

File Format	Extension
JPEG	*.jpg / *.jpe / *.jpeg
ARW [*1]	*.arw

[*1] ARW is only to be used for playing back files.

Other supported files and formats

- Music
- Videos
- Audio sampling rates (for videos)
- External subtitles

---

[48] Supported files and formats | Supported files and formats | Supported files and formats

Music

Use case : USB / Home Network

mp4

Extension: *.mp4 / *.m4a

Description	Sampling Rate

Description	Sampling Rate
AAC-LC	16k / 22.05k / 24k / 32k / 44.1k / 48k
HE-AAC v1 / v2	24k / 32k / 44.1k / 48k

3gpp

Extension: *.3gp / *.3g2

Description	Sampling Rate
AAC-LC	16k / 22.05k / 24k / 32k / 44.1k / 48k
HE-AAC v1 / v2	24k / 32k / 44.1k / 48k

Asf

Extension: *.wma

Description	Sampling Rate
WMA9 Standard	8k / 11.025k / 16k / 22.05k / 32k / 44.1k / 48k

ogg

Extension: *.ogg

Description	Sampling Rate
Vorbis	8k / 11.025k / 16k / 22.05k / 32k / 44.1k / 48k

Other

Description	Sampling Rate
LPCM *1	32k / 44.1k / 48k

Extension: *.mp3

Description	Sampling Rate
MP1L1 / MP1L2 / MP1L3 / MP2L1 / MP2L2	32k / 44.1k / 48k
MP2L3	16k / 22.05k / 24k
MP2.5L3	8k / 11.025k / 12k

Extension: *.wav

Description	Sampling Rate
WAV *2	32k / 44.1k / 48k / 88.2k / 96k / 176.4k / 192k

Extension: *.flac

Description	Sampling Rate
FLAC	16k / 22.05k / 32k / 44.1k / 48k / 88.2k / 96k / 176.4k / 192k

Extension: *.aac

Description	Sampling Rate
AAC-LC	16k / 22.05k / 24k / 32k / 44.1k / 48k
HE-AAC v1 / v2	24k / 32k / 44.1k / 48k

*1 The use case of LPCM is Home Network only.

*2 The use case of WAV is 2ch only.

Other supported files and formats

- Photos
- Videos
- Audio sampling rates (for videos)
- External subtitles

---

[49] Supported files and formats | Supported files and formats | Supported files and formats

Videos

Use case : USB / Home Network

MPEG1 (*.mpg / *.mpe / *.mpeg)

Subtitle Type : External

Video Codec (Profile@Level)	Audio Codec	Max. / Min. Resolution	Max. Frame Rate
MPEG1	MPEG1L2	1920x1080 / QCIF (176x144)	1920x1080@30fps / 1280x720@60fps

MPEG2PS (*.mpg / *.mpe / *.mpeg)

Subtitle Type : External

Video Codec (Profile@Level)	Audio Codec	Max. / Min. Resolution	Max. Frame Rate
MPEG2 MP@HL, MP@H14L, MP@ML	MPEG1L1 / MPEG1L2 / LPCM / AC3	1920x1080 / QCIF (176x144)	1920x1080@30fps / 1280x720@60fps

MPEG2TS

Extension : *.m2t

Subtitle Type : External

Video Codec (Profile@Level)	Audio Codec	Max. / Min. Resolution	Max. Frame Rate
MPEG2 MP@HL, MP@H14L, MP@ML	MPEG1L1 / MPEG1L2 / AAC-LC / HE-AAC v1 / HE-AAC v2 / AC3 / E-AC3	1920x1080 / QCIF (176x144)	1920x1080@30fps / 1280x720@60fps

Extension : *.m2ts / *.mts

Subtitle Type : External

Video Codec (Profile@Level)	Audio Codec	Max. / Min. Resolution	Max. Frame Rate
AVC / H.264 BP@L3, MP@L4.2, HP@L4.2	MPEG1L1 / MPEG1L2 / AAC-LC / HE-AAC v1 / HE-AAC v2 / AC3 / E-AC3	1920x1080 / QCIF (176x144)	1920x1080@60fps

MP4 (*.mp4)

Subtitle Type : External

Video Codec (Profile@Level)	Audio Codec	Max. / Min. Resolution	Max. Frame Rate
AVC / H.264 BP@L3, MP@L4.2, HP@L4.2	AAC-LC / HE-AAC v1 / HE-AAC v2 / AC3 / E-AC3 / AC4 / MPEG1L1 / MPEG1L2	1920x1080 / QCIF (176x144)	1920x1080@120fps
MPEG4 SP@L6, ASP@L5, ACEP@L4	AAC-LC / HE-AAC v1 / HE-AAC v2 / AC3 / E-AC3 / MPEG1L1 / MPEG1L2	1920x1080 / QCIF (176x144)	1920x1080@30fps / 1280x720@60fps
AVC / H.264 BP@L5.2, MP@L5.2, HP@L5.2 *1	AAC-LC / HE-AAC v1 / HE-AAC v2 / AC3 / E-AC3 / AC4 / LPCM	3840x2160 / QCIF (176x144)	3840x2160@60p / 1920x1080@120fps
HEVC / H.265 MP@L5.1, Main10@L5.1	AAC-LC / HE-AAC v1 / HE-AAC v2 / AC3 / AC4 / E-AC3	3840x2160 / QCIF (176x144)	3840x2160@60p / 1920x1080@120fps

*1 This line includes the XAVC S format use case. The maximum supported bitrate for XAVC S is 100 Mbps.

avi (*.avi)

Subtitle Type : External

Video Codec (Profile@Level)	Audio Codec	Max. / Min. Resolution	Max. Frame Rate
Xvid	MPEG1L1 / MPEG1L2 / MPEG1L3 / AC3 / E-AC3	1920x1080 / QCIF (176x144)	1920x1080@30fps / 1280x720@60fps
Motion JPEG	μ-LAW / PCM (U8) / PCM (S16LE)	1280x720 / QCIF (176x144)	1280x720@30fps

Asf (*.asf / *.wmv)

Subtitle Type : External

Video Codec (Profile@Level)	Audio Codec	Max. / Min. Resolution	Max. Frame Rate
VC1 AP@L3, MP@HL, SP@ML	WMA9 Standard	1920x1080 / QCIF (176x144)	1920x1080@30fps / 1280x720@60fps

MKV (*.mkv)

Subtitle Type : Internal / External

Video Codec (Profile@Level)	Audio Codec	Max. / Min. Resolution	Max. Frame Rate
Xvid	DTS core / AC3 / AAC-LC / E-AC3 / HE-AAC v1 / HE-AAC v2 / MPEG1L1 / MPEG1L2 / Vorbis	1920x1080 / QCIF (176x144)	1920x1080@30fps / 1280x720@60fps
AVC / H.264 BP@L3, MP@L4.2, HP@L4.2	DTS core / AC3 / AAC-LC / E-AC3 / HE-AAC v1 / HE-AAC v2 / MPEG1L1 / MPEG1L2 / Vorbis	1920x1080 / QCIF (176x144)	1920x1080@60fps

Video Codec (Profile@Level)	Audio Codec	Max. / Min. Resolution	Max. Frame Rate
MPEG4 SP@L6, ASP@L5, ACEP@L4	DTS core / AC3 / AAC-LC / E-AC3 / HE-AAC v1 / HE-AAC v2 / MPEG1L1 / MPEG1L2 / Vorbis	1920x1080 / QCIF (176x144)	1920x1080@30fps / 1280x720@60fps
VP8	DTS core / AC3 / AAC-LC / E-AC3 / HE-AAC v1 / HE-AAC v2 / MPEG1L1 / MPEG1L2 / Vorbis	1920x1080 / QCIF (176x144)	1920x1080@30fps / 1280x720@60fps
VP9 Profile 0, Profile 2	DTS core / AC3 / AAC-LC / E-AC3 / HE-AAC v1 / HE-AAC v2 / MPEG1L1 / MPEG1L2 / Vorbis	3840x2160 / QCIF (176x144)	3840x2160@60fps
AVC / H.264 BP@L5.2, MP@L5.2, HP@L5.2	DTS core / AC3 / AAC-LC / E-AC3 / HE-AAC v1 / HE-AAC v2	3840x2160 / QCIF (176x144)	3840x2160@60p / 1920x1080@120fps
HEVC / H.265 MP@L5.1, Main10@L5.1	DTS core / AC3 / AAC-LC / E-AC3 / HE-AAC v1 / HE-AAC v2	3840x2160 / QCIF (176x144)	3840x2160@60p / 1920x1080@120fps

3gpp (*.3gp / *.3g2)

Subtitle Type : External

Video Codec (Profile@Level)	Audio Codec	Max. / Min. Resolution	Max. Frame Rate

Video Codec (Profile@Level)	Audio Codec	Max. / Min. Resolution	Max. Frame Rate
MPEG4 SP@L6, ASP@L5, ACEP@L4	AAC-LC / HE-AAC v1 / HE-AAC v2 / AC3 / E-AC3 / MPEG1L1 / MPEG1L2	1920x1080 / QCIF (176x144)	1920x1080@30fps / 1280x720@60fps
AVC / H.264 BP@L3, MP@L4.2, HP@L4.2	AAC-LC / HE-AAC v1 / HE-AAC v2 / AC3 / E-AC3 / MPEG1L1 / MPEG1L2	1920x1080 / QCIF (176x144)	1920x1080@60fps

MOV (*.mov)

Subtitle Type : External

Video Codec (Profile@Level)	Audio Codec	Max. / Min. Resolution	Max. Frame Rate
AVC / H.264 BP@L3, MP@L4.2, HP@L4.2	AAC-LC / HE-AAC v1 / HE-AAC v2 / AC3 / E-AC3 / MPEG1L1 / MPEG1L2 / μ-LAW / PCM (U8) / PCM (S16BE) / PCM (S16LE)	1920x1080 / QCIF (176x144)	1920x1080@60fps
MPEG4 SP@L6, ASP@L5, ACEP@L4	AAC-LC / HE-AAC v1 / HE-AAC v2 / AC3 / E-AC3 / MPEG1L1 / MPEG1L2 / μ-LAW / PCM (U8) / PCM (S16BE) / PCM (S16LE)	1920x1080 / QCIF (176x144)	1920x1080@30fps / 1280x720@60fps
Motion JPEG	AAC-LC / HE-AAC v1 / HE-AAC v2 / AC3 / E-AC3 / MPEG1L1 / MPEG1L2 / μ-LAW / PCM (U8) / PCM (S16BE) / PCM (S16LE)	1280x720 / QCIF (176x144)	1280x720@30fps

WebM (*.webm)

Subtitle Type : External

Video Codec (Profile@Level)	Audio Codec	Max. / Min. Resolution	Max. Frame Rate
VP8	Vorbis	1920x1080 / QCIF (176x144)	1920x1080@30fps / 1280x720@60fps
VP9 Profile 0, Profile 2	Vorbis	3840x2160 / QCIF (176x144)	3840x2160@60fps

Other supported files and formats

- Photos
- Music
- Audio sampling rates (for videos)
- External subtitles

---

[50] Supported files and formats | Supported files and formats | Supported files and formats

Audio sampling rates (for videos)

Audio Codec	Sampling Rate
LPCM	44.1k / 48k
MPEG1L1 / MPEG1L2	32k / 44.1k / 48k
MPEG1L3	32k / 44.1k / 48k
AAC-LC	16k / 22.05k / 24k / 32k / 44.1k / 48k
HE-AAC v1 / v2	24k / 32k / 44.1k / 48k
AC3	32k / 44.1k / 48k
AC4	44.1k / 48k
E-AC3	32k / 44.1k / 48k
Vorbis	8k / 11.025k / 16k / 22.05k / 32k / 44.1k / 48k

Audio Codec	Sampling Rate
WMA9	8k / 11.025k / 16k / 22.05k / 32k / 44.1k / 48k
DTS core	32k / 44.1k / 48k
μ-LAW	8k
PCM (U8)	8k
PCM (S16LE)	11.025k / 16k / 44.1k
PCM (S16BE)	11.025k / 16k / 44.1k

Other supported files and formats

- Photos
- Music
- Videos
- External subtitles

---

[51] Supported files and formats | Supported files and formats | Supported files and formats

External subtitles

Use case : USB

File Format	Extension
SubStation Alpha	*.ass / *.ssa
SubRip	*.srt
MicroDVD	*.sub / *.txt
SubViewer	*.sub
SAMI	*.smi / *.sami
DVD Subtitle System	*.txt

Other supported files and formats

- Photos
- Music
- Videos
- Audio sampling rates (for videos)

[52] Using the TV with Other Devices

Blu-ray and DVD players

Connecting a Blu-ray or DVD player
Watching Blu-ray and DVD discs

[53] Blu-ray and DVD players | Blu-ray and DVD players

Connecting a Blu-ray or DVD player

Connect a Blu-ray/DVD player to the TV.

Use a connection method below based on the terminals available on your TV.

Note

- The available terminals depend your model/region/country.

Hint

- You can also connect a TV box in the same way as a Blu-ray/DVD player.

HDMI connection

For optimum picture quality, we recommend connecting your player to the TV using an HDMI cable. If your Blu-ray/DVD player has an HDMI jack (socket), connect it using an HDMI cable.

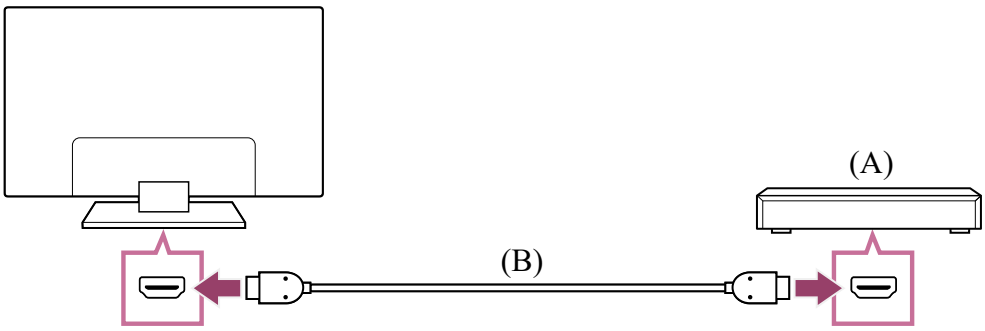

(A) Blu-ray/DVD player (same as connecting a TV box)

(B) HDMI cable (not supplied)*

* Be sure to use an authorised Premium High Speed HDMI™ Cable(s) bearing the HDMI logo.

Composite connection

If your Blu-ray/DVD player has composite jacks (sockets), connect them using a composite video/audio cable.

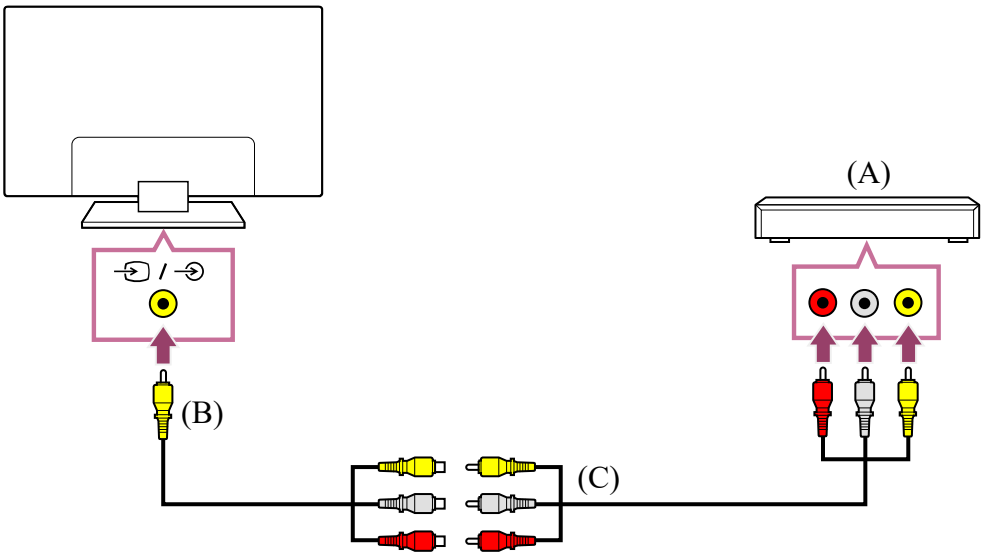

(A) Blu-ray/DVD player (same as connecting a TV box)
(B) Analogue Extension cable (supplied)*
(C) RCA Cable (not supplied)

* Whether the Analogue Extension cable is supplied depends on your model/region/country.

Cable that connects to the video input jack

The 3.5 mm jack of the Analogue Extension Cable has 4 poles.

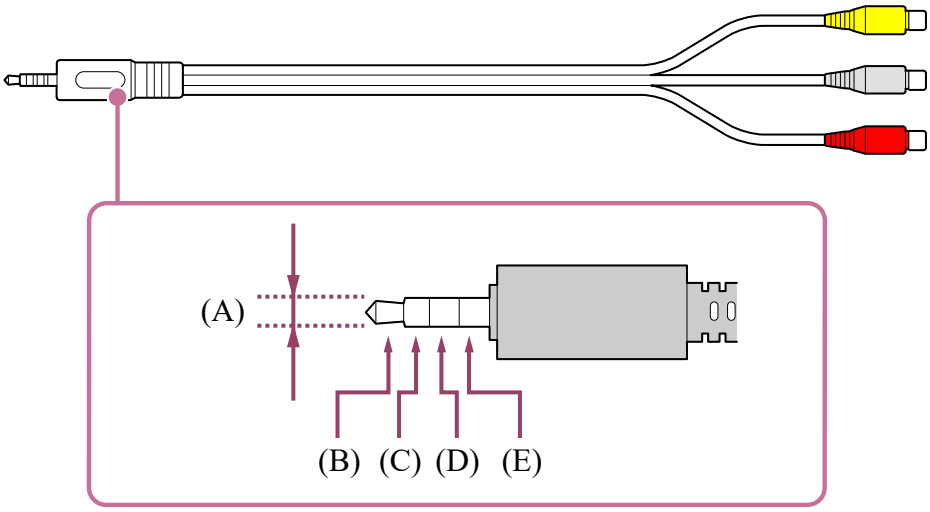

(A) 3.5 mm

(B) Left for Audio signal.

(C) Video signal.

(D) Ground.

(E) Right for Audio signal.

Related topics

- Watching Blu-ray and DVD discs

---

[54] Blu-ray and DVD players | Blu-ray and DVD players

Watching Blu-ray and DVD discs

You can watch content from Blu-ray/DVD discs or other content supported by your player on the TV.

1. **Turn on the connected Blu-ray/DVD player.**
2. **Press the (Input select) button repeatedly to select the connected Blu-ray/DVD player.**
3. **Start playback on the connected Blu-ray/DVD player.**

Hint

- If you connect a BRAVIA Sync-compatible device with an HDMI connection, you can operate it by simply using the TV's remote control. Also, if you press the (Input select) button on the remote control while watching content from the HDMI input, press the ▲ (Up) button on the remote control, and select [Control menu], you can operate the BRAVIA Sync-connected device from the TV screen. (You can also display the operation menu by pressing the (Info/Text reveal) button on the remote control.)

Related topics

- Connecting a Blu-ray or DVD player
- BRAVIA Sync-compatible devices

---

[55] Using the TV with Other Devices

TV box

Connecting a TV box
How to control the TV box using the TV remote control

[56] TV box | TV box

Connecting a TV box

Connect the TV box to the TV.
Connect it to the input on your TV.
For details, refer to the Connecting a Blu-ray or DVD player page.

[57] TV box | TV box

How to control the TV box using the TV remote control

TV box control compatible models have [TV box setup] in [Settings] — [Channels & Inputs] — [External inputs].

Performing [TV box control setup] in [TV box setup] allows you to control a TV box using the TV's remote control.

1. **Press the ⚙ (Quick Settings) button on the remote control, then select [Settings] — [Channels & Inputs] — [External inputs] — [TV box setup] — [TV box control setup].**
2. **Follow the on-screen instructions.**

Note

- When operating the TV's remote control, point it at the TV box.
- Depending on the external devices, some buttons may not respond.
- If you press and hold a button on the remote control, the operation may not work. Instead, try pressing the button repeatedly.
- The availability of this function depends on your model/region/country.

Related topics

- An external device (such as a TV box) cannot be controlled using the TV's remote control. (TV box control compatible models only)

[58] Using the TV with Other Devices

Displaying the iPhone/smartphone or iPad/tablet app screen on the TV

Chromecast built-in™ or AirPlay allows you to display (cast) your favourite websites and app screens on your mobile device directly to the TV.

Using Chromecast built-in

1. **Connect a mobile device such as a smartphone or tablet to the same home network that the TV is connected to.**
2. **Launch a Chromecast supported app on the mobile device.**
3. **Select the (cast) icon in the app.**
4. **Select the TV as the cast destination.**
   The screen of the mobile device is displayed on the TV.

Note

- An Internet connection is required to use Chromecast built-in.

Using AirPlay

This TV supports AirPlay 2.

1. **If AirPlay has not been configured, press (Input select) on the remote control, select (AirPlay), and follow the on-screen instructions.**
2. **Make sure your Apple device is connected to the same network as your TV.**
3. **Tap (AirPlay Video) to play video on your TV, tap (AirPlay Audio) to listen to music on your TV, or tap (Screen Mirroring) to mirror your device's screen on the TV.**
4. **Select the TV as the AirPlay destination.**

Hint

- The TV supports Apple HomeKit.
  You can control the TV with a mobile device such as an iPhone or iPad by pressing the (Input select) button on the remote control, selecting (AirPlay), and following the on-screen instructions to setup Apple HomeKit.
  Available operations vary depending on the version of the app and software.
- If you enable [Remote start], you can turn on the TV with a mobile device such as an iPhone or iPad.
  [Settings] — [Network & Internet] — [Remote start]

Note

- An internet connection is required to use AirPlay.
- Operation of a mobile device such as iPhone or iPad varies depending on the OS version.
- iPhone, iPad, AirPlay and HomeKit are trademarks of Apple Inc., registered in the U.S. and other countries.

Related topics

- Connecting to a network using a LAN cable
- Using Wi-Fi to connect the TV to the Internet/Network

---

[59] Using the TV with Other Devices

Computers, cameras, and camcorders

Connecting a computer and viewing stored content
Connecting a camera or camcorder and viewing stored content
Computer video signal specifications

---

[60] Computers, cameras, and camcorders | Computers, cameras, and camcorders

Connecting a computer and viewing stored content

To connect a computer

Use an HDMI cable to connect your computer to the TV.

(A) Computer

(B) HDMI cable (not supplied)*

* Be sure to use an authorised Premium High Speed HDMI™ Cable(s) bearing the HDMI logo.

To check the video signal specifications

- Computer video signal specifications

To view content stored on a computer

After connecting the computer, press the HOME button, then select the input the computer is connected to.

To check the supported file formats

- Supported files and formats

Note

- For optimum picture quality, we recommend that you set your computer to output video signals according to one of the timings listed in “Computer video signal specifications”.
- Depending on the connection status, the image may be blurred or smeared. In this case, change the computer’s settings and select another input signal from the “Computer video signal specifications” list.

---

[61] Computers, cameras, and camcorders | Computers, cameras, and camcorders

Connecting a camera or camcorder and viewing stored content

To connect a camera or camcorder

Connect your Sony digital still camera or camcorder using an HDMI cable. Use a cable that has an HDMI mini jack (socket) for the digital still camera/camcorder end, and a standard HDMI jack (socket) for the TV end.

(A) Digital still camera

(B) Camcorder

(C) HDMI cable (not supplied)*

* Be sure to use an authorised Premium High Speed HDMI™ Cable(s) bearing the HDMI logo.

To view content stored on a digital still camera/camcorder

1. **After connecting the digital still camera/camcorder, turn it on.**
2. **Press the (Input select) button repeatedly to select the connected digital still camera/camcorder.**
3. **Start playback on the connected digital still camera/camcorder.**

To check the supported file formats

- Supported files and formats

Hint

- If you connect a BRAVIA Sync-compatible device, you can operate it by simply using the TV's remote control. Make sure that the device is BRAVIA Sync-compatible. Some devices may not be compatible with BRAVIA Sync even though they have an HDMI jack (socket).

Related topics

- BRAVIA Sync-compatible devices

[62] Computers, cameras, and camcorders | Computers, cameras, and camcorders

Computer video signal specifications

(Resolution, Horizontal frequency/Vertical frequency)

- 640 x 480, 31.5 kHz/60 Hz
- 800 x 600, 37.9 kHz/60 Hz
- 1024 x 768, 48.4 kHz/60 Hz
- 1152 x 864, 67.5 kHz/75 Hz
- 1280 x 1024, 64.0 kHz/60 Hz
- 1600 x 900, 56.0 kHz/60 Hz
- 1680 x 1050, 65.3 kHz/60 Hz
- 1920 x 1080, 67.5 kHz/60 Hz *
- 3840 x 2160, 67.5 kHz/30 Hz
- 3840 x 2160, 135.0 kHz/60 Hz (8 bits)

* 1920 x 1080 timing, when applied to the HDMI input, will be treated as a video timing and not computer timing. This will affect the [Screen] settings in [Display & Sound]. To view computer content, set [Wide mode] to [Full], and [Display area] to [+1]. ([Display area] is configurable only when [Auto display area] is disabled.)

Note

- The picture may be blurry and may not be displayed correctly depending on your connection status. In this case, change the computer's settings and select a different input signal in "Supported computer input signals".

[63] Using the TV with Other Devices

Audio system (such as an AV receiver or sound bar)

Outputting audio from an audio system
Connecting an audio system
Adjusting an audio system
Using the TV as a centre speaker (only models with TV centre speaker mode)
Pass-through audio formats supported with eARC

[64] Audio system (such as an AV receiver or sound bar) | Audio system (such as an AV receiver or sound bar)

Outputting audio from an audio system

You can connect audio systems such as AV receivers or sound bars to the TV. Select a connection method below according to the specifications of the audio system you want to connect.

- Connecting with an HDMI cable (For details, carefully read “Connection using an HDMI cable” below.)
- Connecting with a digital optical cable

For connection methods, refer to the Connecting an audio system page.

Note

- Refer to the instruction manual of the device to be connected.

Connection using an HDMI cable

This TV supports Audio Return Channel (ARC) or Enhanced Audio Return Channel (eARC). You can use an HDMI cable to output audio from audio systems that support ARC and eARC.

On TVs that support eARC, you can output (pass-through) audio signals from external input devices connected to the TV to eARC supported audio systems by using the HDMI terminal bearing the text “eARC/ARC”.

For connection methods, refer to the Connecting an audio system page.

Note

- The location of the HDMI terminal that supports eARC/ARC varies depending on the model. Refer to the included Setup Guide.

Related topics

- Pass-through audio formats supported with eARC

[65] Audio system (such as an AV receiver or sound bar) | Audio system (such as an AV receiver or sound bar)

Connecting an audio system

See the illustrations below to connect an audio system such as an AV receiver or sound bar.

Note

- The available terminals depend your model/region/country.

HDMI connection (ARC supported)

1 **Connect the TV and audio system with an HDMI cable.**
Connect to the TV's HDMI input terminal bearing the text "eARC/ARC".

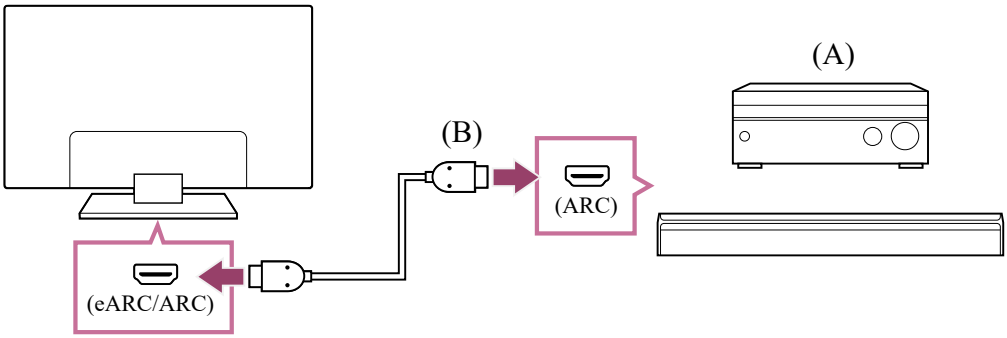

(A) AV receiver or sound bar
(B) HDMI cable (not supplied)*

* We recommend authorised Premium High Speed HDMI™ Cable(s) bearing the HDMI logo.

2 **Adjusting an audio system**

Note

- For ARC connections, voice recognition performance may degrade (only TVs with a built-in MIC).

HDMI connection (eARC supported)

1 **Connect the external input device and TV with an HDMI cable. Connect the TV and audio system with another HDMI cable.**
Connect the audio system to the TV's HDMI input terminal bearing the text "eARC/ARC".

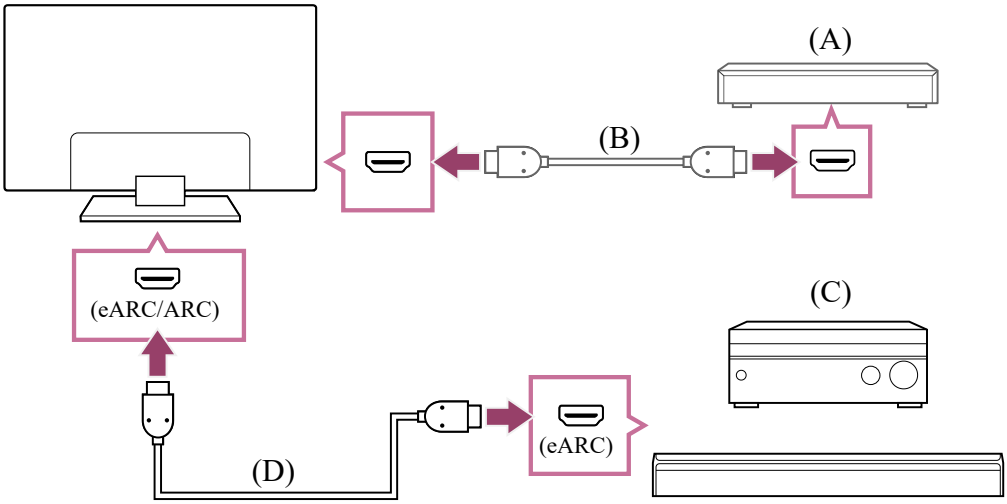

(A) External input device (such as a Blu-ray/DVD recorder)

(B) HDMI cable (not supplied)

(C) AV receiver or sound bar

(D) HDMI cable with Ethernet (not supplied)*

* We recommend authorised Premium High Speed HDMI™ Cable(s) bearing the HDMI logo.

2 **Press the ⚙ (Quick Settings) button on the remote control, then select [Settings] — [Display & Sound] — [Audio output] — [eARC mode] — [Auto].**

3 **Select [Speakers] — [Audio system].**

4 **Enable the audio system's eARC feature.**
Refer to the instruction manual of the device.

5 **Adjusting an audio system**

Note

- You cannot select [eARC mode] if the text-to-speech function for on-screen text within the TV's accessibility features is enabled.
- If audio is being output from an eARC supported device while you are watching HDMI input, the TV operates as follows:
  - audio from system sounds and audio responses is not output, and
  - the voice recognition performance of the built-in MIC may degrade (only TVs with a built-in MIC).

Digital optical cable connection

1 **Connect the TV and audio system with a digital optical cable.**

Connect to the audio system's digital optical input terminal.

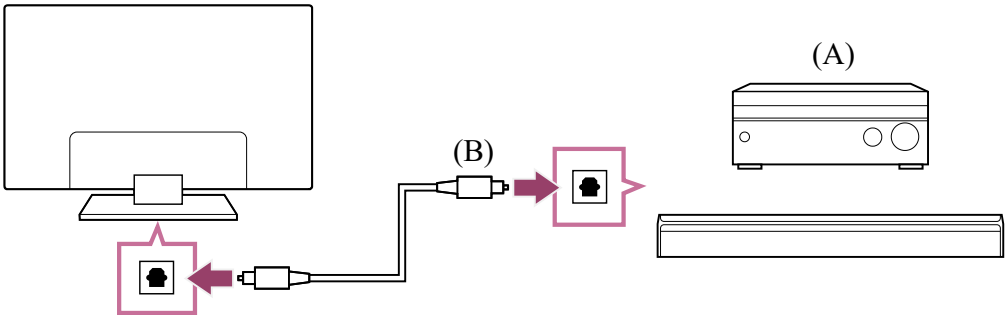

(A) AV receiver or Sound bar

(B) Optical audio cable (not supplied)

2 **Adjusting an audio system**

Hint

- For more information, please visit the Sony support website.
  Support Site

Related topics

- No sound but good picture.
- No audio or low audio with a home theatre system.

---

[66] Audio system (such as an AV receiver or sound bar) | Audio system (such as an AV receiver or sound bar)

Adjusting an audio system

After connecting an audio system to the TV, adjust the TV's audio output from the audio system.

Adjusting an audio system connected with an HDMI cable or digital optical cable

1 **After connecting the TV to your audio system, press the ⚙ (Quick Settings) button on the remote control, then select [Settings] — [Display & Sound] — [Audio output] — [Speakers] — [Audio system].**

2 **Turn on the connected audio system, then adjust the volume.**

If you connect a BRAVIA Sync-compatible device with an HDMI connection, you

can operate it by simply using the TV's remote control.

Note

- You need to configure the [Digital audio out] settings according to your audio system. Press the ⚙ (Quick Settings) button on the remote control, then select [Settings] — [Display & Sound] — [Audio output] — [Digital audio out].
- If the audio system is not compatible with Dolby Digital or DTS, set [Settings] — [Display & Sound] — [Audio output] — [Digital audio out] to [PCM].
- The [Digital audio out] settings are disabled when using audio signals that are passed through from the HDMI input and using eARC.

Hint

- If a specific audio system is connected with an HDMI cable, you can adjust the output timing of the picture and sound.
  - Adjusting the AV sync setting

  For details about supported models, refer to the support site.
  - Support Site

Related topics

- BRAVIA Sync-compatible devices
- Connecting an audio system
- No sound but good picture.
- No audio or low audio with a home theatre system.

---

[67] Audio system (such as an AV receiver or sound bar) | Audio system (such as an AV receiver or sound bar)

Using the TV as a centre speaker (only models with TV centre speaker mode)

Models with TV centre speaker mode have CENTER SPEAKER IN terminals on the back of the TV.

If [Speakers] is set to [Audio system], you can use the TV speakers as a centre speaker for a home theatre simply by connecting an AV receiver to the CENTER SPEAKER IN terminal of the TV*.

*The TV and AV receiver must be connected by either an HDMI cable or digital optical cable.

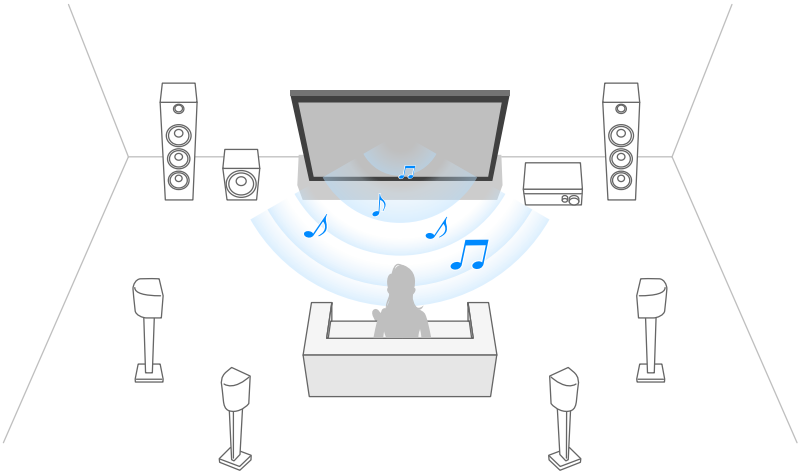

Speaker cable connection

Connect the TV and AV receiver with a speaker cable.

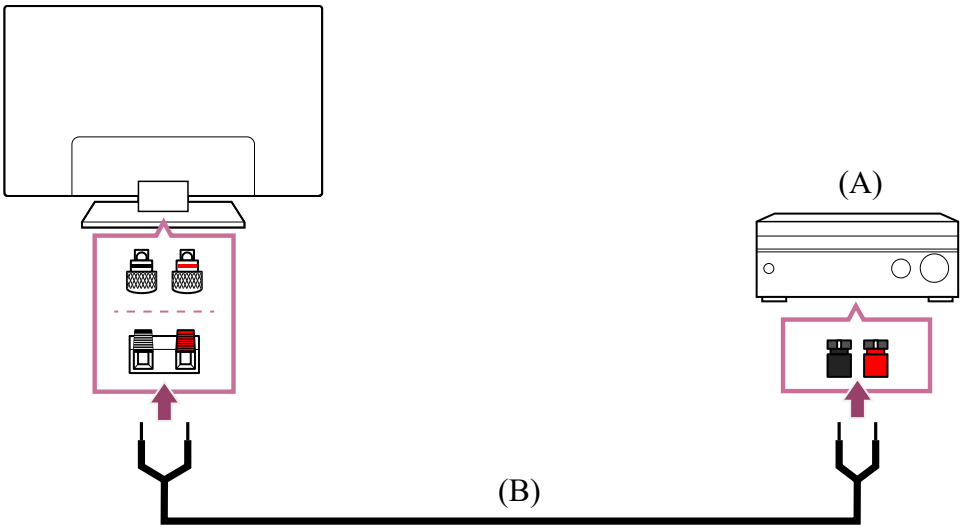

(A) AV receiver

(B) Speaker cable (not supplied)

Use a speaker cable (not supplied) to connect the AV receiver to the CENTER SPEAKER IN terminal of the TV.

When connecting, make sure to twist the ends of the speaker cable and insert them into the connection terminals of the TV and AV receiver.

The CENTER SPEAKER IN terminal varies depending on the model. Refer to the figures below when connecting the speaker cable.

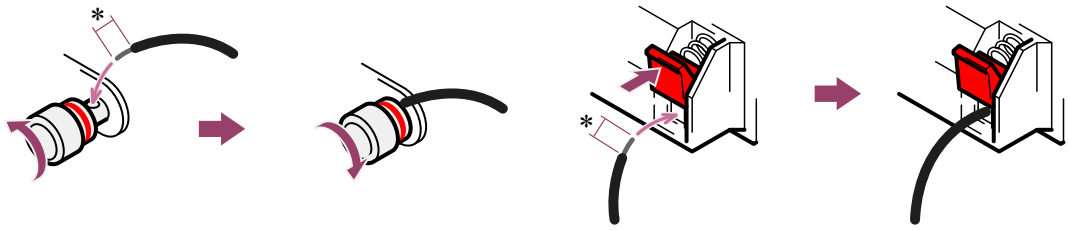

*Strip about 10 mm (13/32 inches) of insulation from the speaker cable at each end.

Note

- To prevent the wires of the speaker cable from touching each other, make sure not to strip too much of the speaker cable.
- Connect the speaker cable properly so that the polarities (+/-) between the TV and AV receiver match.

Related topics

- Connecting an audio system

---

[68] Audio system (such as an AV receiver or sound bar) | Audio system (such as an AV receiver or sound bar)

Pass-through audio formats supported with eARC

Confirm that you can pass-through the following audio formats.

- 7.1 channel linear PCM: 32/44.1/48 kHz 16 bits
- Dolby Digital
- Dolby Digital Plus
- DTS
- Dolby TrueHD
- DTS-HD MA
- Dolby Atmos
- DTS:X Master Audio
- MPEG2 - AAC/MPEG4 - AAC

For details, refer to the support page.

- Support Site

Related topics

- Connecting an audio system

[69] Using the TV with Other Devices

Bluetooth devices

Connecting a Bluetooth device
Adjusting the AV sync setting
Supported Bluetooth profiles

[70] Bluetooth devices | Bluetooth devices

Connecting a Bluetooth device

To pair the TV with a Bluetooth device

Only for Bluetooth A2DP-supported models that can use Bluetooth audio devices such as headphones or speakers.

Bluetooth A2DP-supported models that support Bluetooth audio devices have [A/V sync] in [Settings] — [Display & Sound] — [Audio output].

1. **Turn the Bluetooth device on and put it in pairing mode.**
   To put your Bluetooth device in pairing mode, refer to the instruction manual of the device.

2. **Press the ⚙ (Quick Settings) button on the remote control, then select [Settings] — [Remotes & Accessories] — [Pair accessory] to put the TV in pairing mode.**
   Available Bluetooth devices will be displayed.

3. **Select the desired device, then follow the on-screen instructions.**
   If you are prompted to enter a passcode, refer to the instruction manual of the device.
   After pairing is completed, the device connects to the TV.

To connect to a paired Bluetooth device

1. **Press the ⚙ (Quick Settings) button on the remote control, then select [Settings] — [Remotes & Accessories].**
2. **Select a paired but unconnected device.**
3. **Select [Connect].**

Related topics

- Supported Bluetooth profiles
- Operation cuts out, or a device does not work.
- You want to output sound from the headphones/Bluetooth audio device and audio system/TV speakers at the same time.

[71] Bluetooth devices | Bluetooth devices

Adjusting the AV sync setting

If a Bluetooth audio device is connected, there may be a delay between the picture and sound due to the properties of Bluetooth. You can adjust the delay between the picture and sound with the A/V sync setting. (Only for Bluetooth A2DP-supported models that can use Bluetooth audio devices.)

Bluetooth A2DP-supported models that support Bluetooth audio devices have [A/V sync] in [Settings] — [Display & Sound] — [Audio output].

1. **Press the ⚙ (Quick Settings) button on the remote control, then select [Settings] — [Display & Sound] — [Audio output] — [A/V sync] — the desired option.**

Hint

- You can also adjust the output timing of the picture and sound if a specific audio system is connected with an HDMI cable. For details about supported models, refer to the support site.
  - Support Site

Note

- Depending on the connected Bluetooth audio device, the picture and sound may not match even when the [A/V sync] setting is set to [On] or [Auto].

- To prevent the TV from displaying a black screen immediately after turning it on when a sound bar is connected wirelessly (Bluetooth), set the [A/V sync] setting to [On].
- If [Picture mode] is set to one of the options below, the output timing of the picture and sound is not adjusted even when the [A/V sync] setting is set to [Auto].
  - [Game]
  - [Graphics]
  - [Photo]

  To adjust [A/V sync] when in any of these modes, select [On].
- The responsiveness of the TV while playing video games may feel slower due to the [A/V sync] setting adding a delay to the output timing of the picture. For games that are dependant on response time, we do not recommend you use a Bluetooth device and recommend that you use the TV speakers or a sound bar with a wired (HDMI cable/digital optical cable) connection instead.

[72] Bluetooth devices | Bluetooth devices

Supported Bluetooth profiles

The TV supports the following profiles:

- HID (Human Interface Device Profile)
- HOGP (HID over GATT Profile)
- A2DP (Advanced Audio Distribution Profile)
- AVRCP (Audio/Video Remote Control Profile)
- SPP (Serial Port Profile)

Related topics

- Connecting a Bluetooth device

[73] Using the TV with Other Devices

BRAVIA Sync-compatible devices

BRAVIA Sync overview
Using features available for BRAVIA Sync-compatible devices
Adjusting BRAVIA Sync settings

[74] BRAVIA Sync-compatible devices | BRAVIA Sync-compatible devices

BRAVIA Sync overview

If a BRAVIA Sync-compatible device (e.g., Blu-ray player, AV receiver) is connected with an HDMI cable, you can operate the device with the TV's remote control.

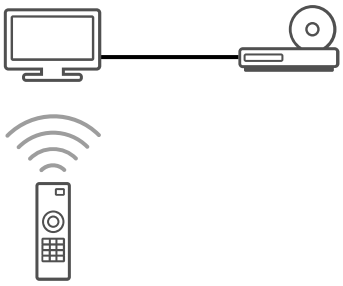

Related topics

- Using features available for BRAVIA Sync-compatible devices
- Adjusting BRAVIA Sync settings

[75] BRAVIA Sync-compatible devices | BRAVIA Sync-compatible devices

Using features available for BRAVIA Sync-compatible devices

To operate BRAVIA Sync-compatible devices from the TV, use the (Input select) button on the remote control to select the device you want to operate.

Blu-ray/DVD player

- Automatically turns the TV on and switches the input to the connected Blu-ray/DVD player when the Blu-ray/DVD player starts to play.
- Automatically turns the connected Blu-ray/DVD player off when you turn the TV off.
- Allows operations such as menu operation and playback with the ▲ (Up) / ▼ (Down) / ◀ (Left) / ▶ (Right) buttons on the TV remote control.

AV receiver

- Automatically turns the connected AV receiver on and switches the sound output from the TV speaker to the audio system when you turn the TV on. This function is only available if you have previously used the AV receiver to output the TV's sound.

- Automatically switches the sound output to the AV receiver by turning the AV receiver on when the TV is turned on.
- Automatically turns the connected AV receiver off when you turn the TV off.
- Adjusts the volume ((Volume) +/- buttons) and mutes the sound ((Mute) button) of the connected AV receiver through the TV's remote control.

Video camera

- Automatically turns the TV on and switches the input to the connected video camera when the camera is turned on.
- Automatically turns the connected video camera off when you turn the TV off.
- Allows operations such as menu operation and playback with the ▲ (Up) / ▼ (Down) / ◀ (Left) / ▶ (Right) buttons on the TV remote control.

Note

- "BRAVIA Sync control" (BRAVIA Sync) is only available for connected BRAVIA Sync-compatible devices that have the BRAVIA Sync logo.

Related topics

- BRAVIA Sync overview
- Adjusting BRAVIA Sync settings

---

[76] BRAVIA Sync-compatible devices | BRAVIA Sync-compatible devices

Adjusting BRAVIA Sync settings

When BRAVIA Sync is set up, you will be able to turn off a connected device with the TV or set a device connected via HDMI cable to be operated with the TV's remote control.

1. **Turn on the connected device.**

2. **To enable [BRAVIA Sync control], press the (Quick Settings) button on the remote control, then select [Settings] — [Channels & Inputs] — [External inputs] — [BRAVIA Sync settings] — [BRAVIA Sync control].**

3. **Activate BRAVIA Sync on the connected device.**
   When a specific Sony BRAVIA Sync-compatible device is connected and powered on and [BRAVIA Sync control] is enabled, BRAVIA Sync is

automatically activated on that device. For details, refer to the instruction manual of the connected device.

Available options

Available options are shown below. (Options vary depending on your model/region/country.)

[Auto devices off]

If disabled, the connected device does not turn off automatically when the TV is turned off.

[Auto TV on]

If disabled, the TV does not turn on automatically when the connected device is turned on.

[BRAVIA Sync device list]

Displays the BRAVIA Sync device list.

[Device control keys]

Allows you to set buttons to control an HDMI connected device.

Related topics

- BRAVIA Sync overview
- Using features available for BRAVIA Sync-compatible devices

[77] Using the TV with Other Devices

Viewing pictures in 4K from compatible devices

Viewing pictures in 4K resolution
Settings for viewing pictures through HDMI input with higher quality

[78] Viewing pictures in 4K from compatible devices | Viewing pictures in 4K from compatible devices

Viewing pictures in 4K resolution

You can connect a digital still camera/camcorder that supports HDMI 4K output to HDMI IN of the TV to display high resolution photos stored on the camera. You can also display

high resolution photos stored in connected USB devices or your home network. A picture with a 4K or higher resolution can be displayed in 4K resolution (3840×2160).

The availability of this function depends on your region/country.

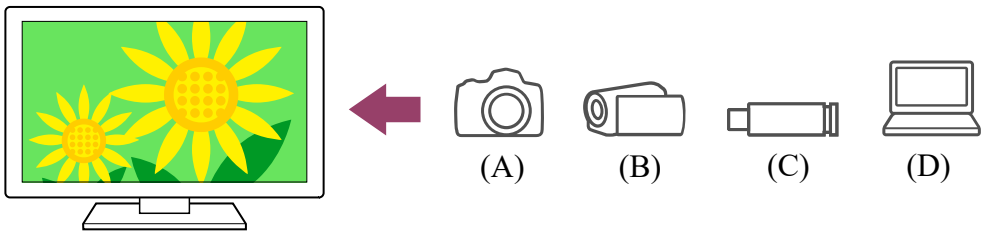

(A) Digital still camera
(B) Camcorder
(C) USB device
(D) Network device

To view pictures stored on a USB device or network device in 4K resolution

1. **Connect the USB device or network device to the TV.**
2. **Press the HOME button, and select [Media Player] from the Home menu.**
   If the supplied remote control has an APPS button, you can press the APPS button.
3. **Select the USB device name or network device name.**
4. **Select the folder, and then select the file to play.**

To view pictures stored on a digital still camera/camcorder

1. **Connect a digital still camera or camcorder that supports HDMI output to the HDMI IN jack (socket) of the TV, using an HDMI cable.**
2. **Press the (Input select) button repeatedly to select the connected device.**
3. **Set the connected device to 4K output.**
4. **Start playback on the connected device.**

To check the supported file formats

- Supported files and formats

To view pictures in 4K resolution with higher quality

You can set the HDMI signal format to Enhanced format to view pictures in 4K resolution with higher quality.

For information about Enhanced format or changing the settings, refer to the Settings for viewing pictures through HDMI input with higher quality page.

Note

- A 3D picture cannot be displayed.
- If you change the picture by pressing the ◀ (Left) / ▶ (Right) buttons, it may take a moment for the picture to be displayed.

Related topics

- Computers, cameras, and camcorders
- USB devices
- Connecting to a Network

---

[79] Viewing pictures in 4K from compatible devices | Viewing pictures in 4K from compatible devices

Settings for viewing pictures through HDMI input with higher quality

To display a picture from a device connected to the HDMI input terminal in a higher quality HDMI format[*1], set [HDMI signal format] in [External inputs].
[*1] Such as 8K, 4K 100/120 Hz, 4K 60p 4:2:0 10 bit, 4K 60p 4:4:4, or 4:2:2

HDMI signal format

To change the HDMI signal format setting, press the ⚙ (Quick Settings) button on the remote control, then select [Settings] — [Channels & Inputs] — [External inputs] — [HDMI signal format] — the HDMI input you want to set.
Follow the on-screen instructions, and set the HDMI signal format from the HDMI input terminal to a suitable format below. Available HDMI signal formats depend on your model.

- Standard format
- Enhanced format
- Enhanced format (Dolby Vision)
- Enhanced format (4K120, 8K)

Note

- Support for the display of 4K 100/120 Hz and 8K picture depends on your model/region/country.
- When using Enhanced format, picture and sound may not be output correctly. In this case, connect the device to an HDMI IN that is in [Standard format], or change the HDMI signal format of HDMI IN to [Standard format].
- Only set to Enhanced format when using compatible devices.
- When you watch 4K picture with High-Quality, use a Premium High Speed HDMI™ Cable(s) that supports speeds of 18 Gbps. For details on a Premium High Speed HDMI™ Cable(s) that supports 18 Gbps, refer to the cable specifications.
- To display 4K 100/120 Hz or 8K picture, an Ultra High Speed HDMI™ Cable that supports 48 Gbps is required. Refer to the cable specifications to find out whether a cable supports 48 Gbps.

Related topics

- Viewing pictures in 4K resolution

[80] Using the TV with Other Devices

BRAVIA Connectivity Guide

Descriptions about connecting devices to the TV are also available on the Sony support website. Refer to it as necessary.

- https://www.sony.net/tv_connectivity_guide/

[81]

Connecting to a Network

Connecting to a network
Home network features
Viewing Internet media

[82] Connecting to a Network

Connecting to a network

Connecting to a network using a LAN cable
Connecting to a network using a wireless connection

[83] Connecting to a network | Connecting to a network

Connecting to a network using a LAN cable

Connecting to a network using a LAN cable

A wired LAN connection allows you to access the Internet and your home network.

Make sure to connect to the Internet or home network via a router.

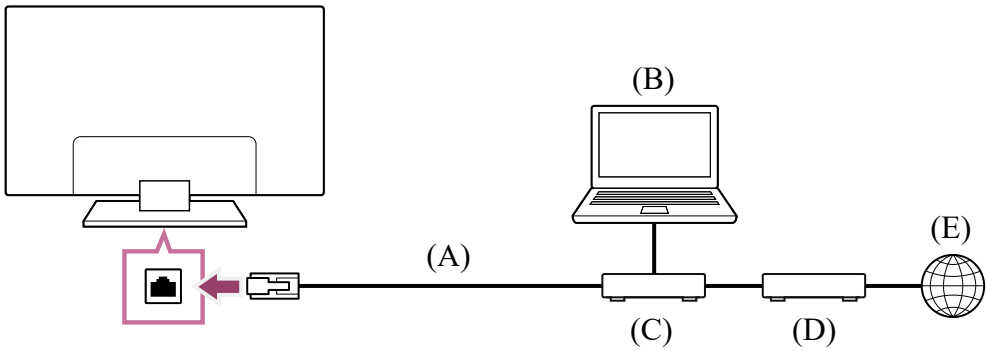

(A) LAN cable
(B) Computer
(C) Router
(D) Modem
(E) Internet

1 **Set up your LAN router.**
For details, refer to the instruction manual of your LAN router, or contact the person who set up the network (network administrator).

Note

- It is strongly recommended for security purposes to connect your TV to the Internet via a router/modem that includes router functionality. Direct connection of your TV to the Internet may expose your TV to a security threat such as extraction or tampering of content or personal information.
  Contact your service provider or network administrator to confirm your network includes router functionality.
- The network-related settings that are required may vary depending on the Internet service provider or router. For details, refer to the instruction manuals provided by

the Internet service provider or those supplied with the router. You can also contact the person who set up the network (network administrator).

Related topics

- The TV cannot connect to the Internet/Network.
- Using Wi-Fi to connect the TV to the Internet/Network
- Home network features

[84] Connecting to a network | Connecting to a network

Connecting to a network using a wireless connection

Using Wi-Fi to connect the TV to the Internet/Network
Using Wi-Fi Direct to connect to the TV (no wireless router required)

[85] Connecting to a network using a wireless connection | Connecting to a network using a wireless connection | Connecting to a network using a wireless connection

Using Wi-Fi to connect the TV to the Internet/Network

The built-in wireless LAN device allows you to access the Internet and enjoy the benefits of networking in a cable-free environment.

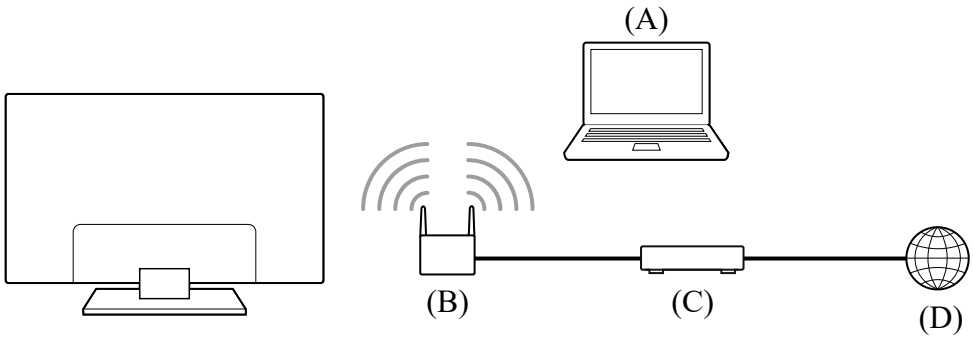

(A) Computer
(B) Wireless router
(C) Modem
(D) Internet

1. **Set up your wireless router.**
   For details, refer to the instruction manual of your wireless router, or contact the person who set up the network (network administrator).

2. **Press the ⚙ (Quick Settings) button on the remote control, then select [Settings] — [Network & Internet].**

3. **Select a network you want to connect to and set the password.**
   If your TV can not connect to the Internet/Network, refer to The TV cannot connect to the Internet/Network. page.

To turn off the built-in wireless LAN

1. **To disable [Wi-Fi], press the ⚙ (Quick Settings) button on the remote control, then select [Settings] — [Network & Internet] — [Wi-Fi].**

Hint

- For smooth video streaming:
  - Change the setting of your wireless router to a high-speed networking standard such as 802.11n if possible.
    For details on how to change the setting, refer to the instruction manual of your wireless router, or contact the person who set up the network (network administrator).
  - If the above procedure does not deliver any improvement, change the setting of your wireless router to 5GHz, which may help improve the video streaming quality.
  - The 5GHz band may not be supported depending on your region/country. If the 5GHz band is not supported, the TV can only connect to a wireless router using the 2.4GHz band.

Note

- It is strongly recommended for security purposes to connect your TV to the Internet via a router/modem that includes router functionality. Direct connection of your TV to the Internet may expose your TV to a security threat such as extraction or tampering of content or personal information.
  Contact your service provider or network administrator to confirm your network includes router functionality.
- The network-related settings that are required may vary depending on the Internet service provider or router. For details, refer to the instruction manuals provided by the Internet service provider or those supplied with the router. You can also contact the person who set up the network (network administrator).
- If you select the [Show password] option in the password entry screen, the exposed password may be seen by other individuals.

Related topics

- Network (Internet/home)/apps
- The TV cannot connect to the Internet/Network.
- Connecting to a network using a LAN cable
- Using Wi-Fi Direct to connect to the TV (no wireless router required)
- Home network features

[86] Connecting to a network using a wireless connection | Connecting to a network using a wireless connection | Connecting to a network using a wireless connection

Using Wi-Fi Direct to connect to the TV (no wireless router required)

You can connect a device to the TV wirelessly, without using a wireless router, and then stream videos, photos, and music that is stored on your device directly to the TV.

Note

- Wi-Fi Direct connects smartphones and computers to the TV directly instead of through the Internet, so streaming video content that require an Internet connection cannot be played back on the TV.

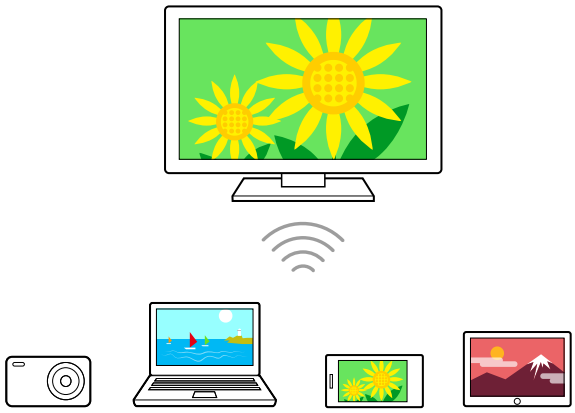

1. **Press the ⚙ (Quick Settings) button on the remote control, then select [Settings] — [Network & Internet] — [Wi-Fi Direct] — [Wi-Fi Direct settings].**

2. **Select the TV name displayed on the TV screen with the Wi-Fi Direct device.**
   If the device does not support Wi-Fi Direct, select the [Show Network (SSID)/Password].

3 **Operate the Wi-Fi Direct/Wi-Fi device to connect with the TV.**

4 **Send content from the Wi-Fi Direct/Wi-Fi device to the TV.**
For details, refer to the instruction manual of the device.

If connection is not successful

When the standby screen for the Wi-Fi Direct setting is displayed, select [Show Network (SSID)/Password] and follow the on-screen instructions to complete the set-up.

To connect another device

Follow the steps above to connect devices. Up to 10 devices can be connected at the same time. To connect another device when 10 devices are already connected, disconnect an unnecessary device, then connect the other device.

To change the name of the TV shown on the connected device

Press the (Quick Settings) button on the remote control, then select [Settings] — [System] — [About] — [Device name].

To list connected devices/deregister devices

Press the (Quick Settings) button on the remote control, then select [Settings] — [Network & Internet] — [Wi-Fi Direct] — [Show device list/Delete].

To deregister a device, select the device in the list to delete, then press the (Enter) button. Then, select [Yes] on the confirmation screen.

To deregister all devices, select [Delete all] in the list, then [Yes] in the confirmation display.

---

[87] Connecting to a Network

Home network features

Adjusting home network settings
Playing content from a computer
Playing content from a media server

---

[88] Home network features | Home network features

Adjusting home network settings

You can adjust the following home network settings.

To check the server connection

Press the ⚙ (Quick Settings) button on the remote control, then select [Settings] — [Network & Internet] — [Home network setup] — [Server diagnostics] — follow the on-screen instructions to perform diagnostics.

To use the renderer function

Press the ⚙ (Quick Settings) button on the remote control, then select [Settings] — [Network & Internet] — [Home network setup] — [Renderer] — the desired option.

[Renderer function]

Enable the renderer function.

You can play photo/music/video files in a controller (e.g., digital still camera) on the TV screen by operating the device directly.

[Renderer access control]

- Select [Automatic access permission] to access the TV automatically when a controller accesses the TV for the first time.
- Select [Custom settings] to change the access permission settings of each controller.

To use the remote device

Press the ⚙ (Quick Settings) button on the remote control, then select [Settings] — [Network & Internet] — [Remote device settings] — the desired option.

[Control remotely]

Enable operation of the TV from a registered device.

[Deregister remote device]

Deregister a device to disable operation of the TV from that device.

[89] Home network features | Home network features

Playing content from a computer

You can enjoy content (photo/music/video files) stored on a network device located in another room, if you connect the TV to a home network via a router.

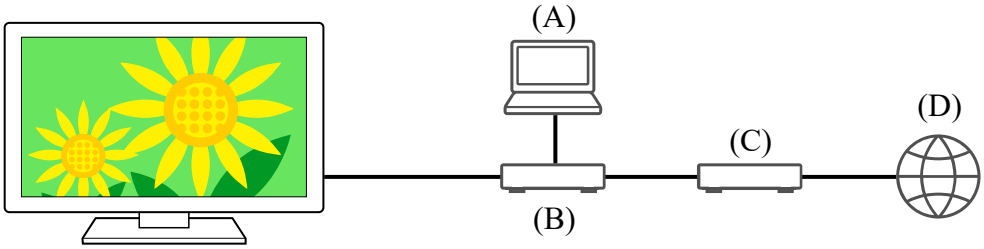

(A) Computer (Server)
(B) Router
(C) Modem
(D) Internet

1. **Connect the TV to your home network.**
2. **Press the HOME button, and select [Media Player] from the Home menu.**
   If the supplied remote control has an APPS button, you can press the APPS button.
3. **Select the network device name.**
4. **Select the folder, and then select the file to play.**

To check the supported file formats

- Supported files and formats

Note

- Depending on the file, playback may not be possible even when using the supported formats.

Related topics

- Adjusting home network settings

---

[90] Home network features | Home network features

Playing content from a media server

You can play photo/music/video files in a controller (e.g., digital still camera) on the TV screen by operating the controller directly, if you connect the TV to a home network via a router. The controller should also be renderer-compatible.

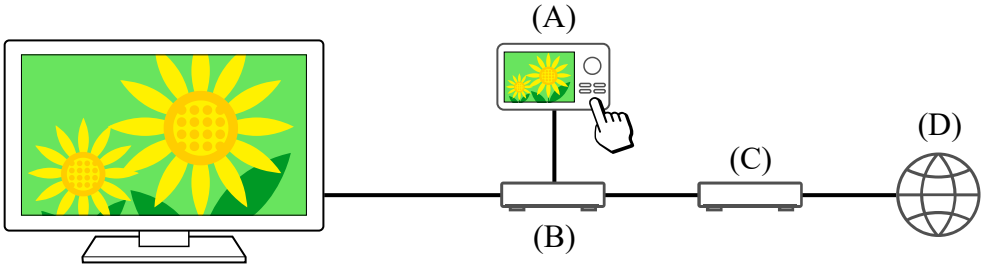

(A) Digital still camera (Controller)

(B) Router

(C) Modem

(D) Internet

1 **Connect the TV to your home network.**

2 **Operate the controller to start playing the content on the TV screen.**

Related topics

- Adjusting home network settings

[91] Connecting to a Network

Viewing Internet media

You can use video streaming services such as YouTube™ and Netflix to watch Internet content. The available services vary depending on your country and region. You can launch these services by selecting their apps in the Home Menu. If a Google Account is set on the TV, you can also select content that is displayed in the Home Menu.

Note

- An Internet connection is required to watch Internet content.
- Video streaming services such as Netflix and Amazon Prime are paid services.
- Supported video streaming services depend on the model/region/country, and some models/regions/countries do not support such services.

Hint

- Even if a Google Account is not set on the TV, you can enjoy videos such as from YouTube displayed on the Home Menu, as long as the TV is connected to the Internet. To install new apps such as those for video streaming services, you must set a Google Account on the TV.

Related topics

- Accounts & Sign-In
- Enjoying safe apps and video streaming services (Security and restrictions)
- Connecting to a network using a LAN cable
- Using Wi-Fi to connect the TV to the Internet/Network
- Home menu

[92]

Settings

The menus displayed in the TV settings vary depending on your model/region/country.

Using the Quick Settings
Channels & Inputs Channels, External inputs and Recording device setup, etc.
Display & Sound Picture, Screen, Sound and Audio output, etc.
Network & Internet
Accounts & Sign-In Configure the Google Account or add other accounts.
Privacy You can restrict installation of apps from unknown sources.
Apps
System Date and time, Language, Sound, Accessibility, Parental controlsand LED indicator, etc.
Remotes & Accessories Remote control and Bluetooth settings.
Help & feedback Provides help from Sony and Google.
Timers & Clock On timer, Sleep timer, Alarm, Auto clock display, etc.

[93] Settings

Using the Quick Settings

If you press the ⚙ (Quick Settings) button on the remote control, you can quickly access features such as [Picture mode], [Sleep timer], and [Picture Off] on the current screen, and settings such as [Speakers] depending on the connected devices. You can also display [Settings] from [Quick Settings].

Hint

- If the Home screen is displayed when the TV is turned on, you can use [Power-on behaviour] to change it to the TV broadcast channel or external input such as HDMI

that you were watching before turning off the TV.

Note

- The menus displayed in the TV settings vary depending on your model/region/country.

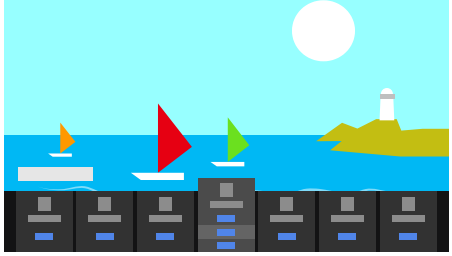

1. **Press the ⚙ (Quick Settings) button on the remote control.**
2. **Move the focus to change a setting or select it.**

To change the settings that are displayed

1. **Press the ⚙ (Quick Settings) button on the remote control.**
2. **Move the focus left or right, and select ➕ (Edit).**
3. **Select the desired setting.**
4. **Select [Close].**

Hint

- To change the order or hide a displayed item, press and hold the (Enter) button on the remote control with that item highlighted, and [Move] and [Hide] will be displayed. If you select [Move], use ◀ (Left) / ▶ (Right) on the remote control to move the item to the desired position, and then press the (Enter) button on the remote control.
- With [BRAVIA notifications] in Quick Settings, you can check if there are notifications such as software updates and low battery levels in the remote control.

[94] Settings

Channels & Inputs

1 **Press the ⚙ (Quick Settings) button on the remote control, then select [Settings] — [Channels & Inputs] — the desired option.**

Available options

[Channels]

Configures the settings related to receiving broadcast programming. You can also configure the settings related to receiving satellite broadcast programming.

To tune digital channels

Receiving digital broadcasts

To tune your satellite

Receiving satellite broadcasts

To sort channels or edit the channel list

Sorting or editing the channels

[Preferences (Channels)]

Configures [Subtitle settings] and [Audio settings (Broadcast)].

[Info banner]

Display programme information when channel is changed.

[External inputs]

Configures the settings of the external inputs and BRAVIA Sync.
For details about BRAVIA Sync, refer to BRAVIA Sync-compatible devices.

[Recording device setup]

Configures the settings of USB HDD devices for recording. (This option may not be available depending on your model/region/country.)

[TV button shortcut]

If an external input such as a connected tuner is set, it will be displayed when the TV button on the remote control is pressed.

[95] Settings

Display & Sound

1 **Press the ⚙ (Quick Settings) button on the remote control, then select [Settings] — [Display & Sound] — the desired option.**

Available options

[Picture]

Configures display settings that adjust the picture quality, such as screen brightness.
To adjust the picture quality to your preferences, refer to the Adjusting the picture quality page.

[Screen]

Adjusts the screen size and position.

[Sound]

Configures settings that adjust the sound.
To adjust the sound quality to your preferences, refer to the Adjusting the sound quality page.

[Audio output]

Configures selection settings related to speakers.

[Expert panel settings](only models equipped with an OLED panel)

Use when setting [Pixel shift] or manually performing [Panel refresh].
For details, refer to OLED panel (only models equipped with an OLED panel).

[96] Settings

Network & Internet

Configures settings for such things as wireless LANs, wired LANs, and home networks.

Related topics

- Connecting to a Network

[97] Settings

Accounts & Sign-In

1. **Press the ⚙ (Quick Settings) button on the remote control, then select [Settings] — [Accounts & Sign-In] — the desired option.**

Available options

When a Google Account is set on the TV

Configure the Google Account or add other accounts.

When a Google Account is not set on the TV

[Accounts & Sign-In] cannot be used. To set a Google Account, set up Google TV from the settings menu.

---

[98] Settings

Privacy

You can restrict the installation of apps from unknown sources.

---

[99] Settings

Apps

Allows you to configure or uninstall apps, or clear the cache.

Related topics

- Installing apps

---

[100] Settings

System

---

1. **Press the ⚙ (Quick Settings) button on the remote control, then select [Settings] — [System] — the desired option.**

Note

- Depending on the settings of the TV, some options may not be displayed or available.

Available options

[Accessibility]

Configures the settings of accessibility features and services for helping users navigate their devices more easily.

[About]

Displays information about the TV.
Here, you can return the TV to the state when it was purchased.

[Date and time]

Configures the current time and auto clock display.

Note

- For models equipped with an OLED panel, constant display of the clock is not available to prevent image retention.

[Language]

Selects the menu language. The selected menu language will also set the voice recognition language.

[Keyboard]

Configures the settings of the on-screen keyboard.

[Storage]

Changes the settings related to data storage.

[Ambient mode]

Configures what is displayed on the screen when the TV is not operated after a certain amount of time while displaying content other than broadcasts and videos.

[Power and energy]

Configures the settings related to saving energy and the startup TV screen.

[Cast]

Configures the operation permissions when casting from an external device.

[Restart]

Restarts the TV.

[Parental controls]

Configures the parental lock settings for restricting usage of items such as [Channels & External inputs], [Apps] and [Screen time].

[LED indicator]

Configures the [Operational response] and [Voice detection status]* settings. (The displayed menu varies depending on the model.)

[Sound]

Configures the [System sounds] setting.

[Apple AirPlay & HomeKit]

Configures the settings for Apple AirPlay & HomeKit.

[Initial setup]

Sets up the basic features such as network and channels for first time use.

[Retail mode settings]

Enriches the display for shop front use by setting [Demo mode], etc.

* Only TVs with a built-in MIC

[101] Settings

Remotes & Accessories

1 **Press the ⚙ (Quick Settings) button on the remote control, then select [Settings] — [Remotes & Accessories] — the desired option.**

Available options

You can enable or disable Bluetooth, or register Bluetooth devices.

[Bluetooth]

Enables or disables Bluetooth.

[Pair accessory]

Pairs Bluetooth devices.

[Remote control]

Setup for pairing the Voice Remote Control.

Related topics

- Bluetooth devices
- Remote control
- Using the remote control microphone

[102] Settings

Help & feedback

Help from Sony can be displayed here. If a Google Account is set on the TV, you can also give Google feedback.

[103] Settings

Timers & Clock

In Timers & Clock, you can set the On timer, Sleep timer, Alarm, and Auto clock display.

Adding Timers & Clock to the input selection screen

1. **Press the (Input select) button.**
   Available devices and apps are displayed at the bottom of the screen.
2. **Press the ▶ (Right) button on the remote control and select + (Edit).**
3. **Select Timers & Clock and press the Enter button.**
   Timers & Clock is added.

To configure settings for Timers & Clock

1. **Press the (Input select) button on the remote control and select the following.**
   (Timers & Clock icon) — the desired setting

Available options

[On timer]

Turns on the TV to the desired channel or input at a preset time.

[Sleep timer]

Turns off the TV after a preset time.

[Alarm]

Plays a sound after a preset time.

[Clock display]

Displays the clock on the TV screen always or at every hour.

Note

- For models equipped with an OLED panel, constant display of the clock is not available to prevent image retention.

Related topics

- Selecting inputs

[104]

Troubleshooting

Start here Experiencing trouble? Start here.
Picture (quality)/screen
Keyboard
Broadcast reception
Sound
Network (Internet/home)/apps
Remote control/accessories
Power
Connected devices
USB HDD recording
LED

[105] Troubleshooting

Start here

Self diagnostics
Software updates
If a full reset (restart) of the TV is required
Frequently Asked Questions for Troubleshooting

[106] Start here | Start here

Self diagnostics

Check if the TV is working properly.

1. **Press the [HELP] button.**
2. **Select [Status & Diagnostics] — [Self diagnostics].**

Hint

You can also check the following symptoms in [Status & Diagnostics].

- [Internet connection diagnostics]
- [External device connection diagnostics]
- [Picture/Sound test]

If the problem persists, try the following.

- Reset (restart) the TV. For details, refer to If a full reset (restart) of the TV is required.
- Check and try Software updates.
- Support Site

[107] Start here | Start here

Software updates

Sony will provide software updates from time to time in order to enhance functionality and provide users with the latest TV experience. The easiest way to receive software updates is via an internet connection to the TV.

To check for software updates automatically

1. **Press the [HELP] button.**
2. **Enable [Automatically check for update] in [Status & Diagnostics] — [System software update].**

Hint

- To update the software manually, select [Software update].
- You can check the BRAVIA notifications or support website for a list of changes made by the software update.

Note

- When [Automatically check for update] is disabled, the TV cannot receive notifications even when a software update is available.

Updating software via USB storage device

If you do not have a network connection, you can also update the software by using a USB storage device. Use your computer to download the latest software from the Sony support website onto a USB storage device. Insert the USB storage device to a USB port on the TV and the software update will start automatically.

If you will update the TV software by using a USB storage device, you should read the cautions for update by USB storage device on the website.

For more about the support site, please see the Support Site page.

Related topics

- Connecting to a Network

---

[108] Start here | Start here

If a full reset (restart) of the TV is required

If you have trouble such as the picture not displaying on the screen or the remote control not working, reset the TV with the following procedure. If the problem persists, try the factory reset procedure below.
If an external USB device is connected to the TV, disconnect the USB device from the TV before resetting.

Power Reset

1. **Restart the TV with the remote control.**
   Press and continue holding the power button on the remote control for about 5 seconds until the TV restarts (a shutting down message will appear). (Depending on your model/region/country, you can also press and hold the power button on the remote control for about 2 seconds and then select [Restart] from the TV screen.) The TV will turn off and restart automatically after about one minute.

2 **Unplug the AC power cord (mains lead).**
If the problem persists after step 1, unplug the TV power cord (mains lead) from the electrical outlet. Then press the power button on the TV, and release it. Wait for 2 minutes, and plug the power cord (mains lead) back into the electrical outlet.

Hint

- TV models with 1 button on the TV (power button only) can also be restarted using the power button. Press the power button on the TV to display the operation menu, select [Restart] in the menu, and then press and hold the power button to restart the TV.
- Your personal settings and data will not be lost after the TV restarts.

Factory data reset

If the problem persists after a power reset, try a factory data reset.

Note

Performing a factory reset will delete all of the TV's data and settings (such as Wi-Fi and wired network setting information, Google Account and other login information, Google Play and other installed apps).

1 **Press the ⚙ (Quick Settings) button on the remote control, then select [Settings] — [System] — [About] — [Reset] — [Factory data reset].**

2 **Delete everything.**
If you have set a PIN code on your TV, you will be prompted to input it.
After the factory reset process completes successfully, the TV will start the Initial Setup wizard. You must agree to the Google Terms of Service and Google Privacy Policy.

---

[109] Start here | Start here

Frequently Asked Questions for Troubleshooting

For troubleshooting information, you can also refer to "Frequently Asked Questions" in our support site below.

- http://www.sony.net/androidtv-faq/

[110] Troubleshooting

Picture (quality)/screen

No colour/Dark picture/Colour is not correct/Picture is too bright.
Distorted picture./The screen flickers.
The screen suddenly changes to a video you do not recognise while watching TV.
There are banners/tickers at the top or bottom of the screen.
High resolution HDR pictures are not displayed.
A message about an app asking for permission to access a TV function is displayed.
OLED panel (only models equipped with an OLED panel)

[111] Picture (quality)/screen | Picture (quality)/screen

No colour/Dark picture/Colour is not correct/Picture is too bright.

- Check the antenna (aerial)/cable connection.
- Connect the TV to the AC power (mains), and press the power button on the TV or the remote control.
- Press the ⚙ (Quick Settings) button on the remote control, and select [Settings] — [Display & Sound] — [Picture] to make adjustments.
  For details, refer to Adjusting the picture quality page.
- If you set [Power saving] to [Low] or [High], the black level will be enhanced. Press the ⚙ (Quick Settings) button on the remote control, then select [Settings] — [System] — [Power and energy] — [Power saving] to [Off] to brighten the screen.

Note

- Picture quality depends on the signal and content.
- The picture quality may improve if you change it in [Picture] under [Settings].
  Press the ⚙ (Quick Settings) button on the remote control, and select [Settings] — [Display & Sound] — [Picture] — [Brightness], and adjust [Brightness] or [Contrast].

Related topics

- Display & Sound

[112] Picture (quality)/screen | Picture (quality)/screen

Distorted picture./The screen flickers.

Check the connection and position of the antenna (aerial) and peripheral devices

- Check the antenna (aerial)/cable connection.
- Keep the antenna (aerial)/cable away from other connecting cables.
- When installing an optional device, leave some space between the device and the TV.
- Make sure that the antenna (aerial) is connected using a high quality 75-ohm coaxial cable.

Check the [Motion] setting

- Press the ⚙ (Quick Settings) button on the remote control, and select [Settings] — [Display & Sound] — [Picture] — [Motion] — [Motionflow] — [Off].
- Change the current setting of [Film mode] to [Off].
  Press the ⚙ (Quick Settings) button on the remote control, and select [Settings] — [Display & Sound] — [Picture] — [Motion] — [Film mode].
- Check the [Analogue] settings.
  Press the ⚙ (Quick Settings) button on the remote control, then select [Settings] — [Channels & Inputs] — [Channels] — [Channel setup] — [Manual tuning] — [Analogue].
  - Disable [LNA] to improve picture reception. ([LNA] may not be available depending on your situation/region/country.)
  - Perform [AFT] to improve picture for analogue reception.
    (Availability of [Analogue] and its options may vary depending on the region/country/situation.)

Related topics

- Ghosting or double images appear.

[113] Picture (quality)/screen | Picture (quality)/screen

The screen suddenly changes to a video you do not recognise while watching TV.

In this case, the TV might be in demo mode. Try exiting demo mode.

- Press the ⚙ (Quick Settings) button on the remote control and select [Settings] — [System] — [Retail mode settings]. Disable [Demo mode] and [Picture reset mode].

[114] Picture (quality)/screen | Picture (quality)/screen

There are banners/tickers at the top or bottom of the screen.

In this case, the TV might be in demo mode. Try exiting demo mode.

- Press the ⚙ (Quick Settings) button on the remote control and select [Settings] — [System] — [Retail mode settings]. Disable [Demo mode] and [Picture reset mode].

[115] Picture (quality)/screen | Picture (quality)/screen

High resolution HDR pictures are not displayed.

The following are required to watch high resolution HDR pictures such as 4K (50p/60p)*.

- Connect the 4K (50p/60p)* playable device.
- Use a Premium High Speed HDMI™ Cable(s) that supports 18 Gbps.
- Set [HDMI signal format] to [Enhanced format] by selecting [Settings] — [Channels & Inputs]— [External inputs] — [HDMI signal format] — the HDMI terminal you want to set.
- Check whether the connected device has the latest settings or firmware.

* Availability depends on your model/region/country.

[116] Picture (quality)/screen | Picture (quality)/screen

A message about an app asking for permission to access a TV function is displayed.

- Select whether to allow or deny the app access to the displayed function.
- You can check the list of app permissions categorized by TV function and change permission settings for each app. Press the ⚙ (Quick Settings) button on the remote control, select [Settings] — [Apps] — [App permissions] — the desired TV function.

[117] Picture (quality)/screen | Picture (quality)/screen

OLED panel (only models equipped with an OLED panel)

The screen becomes darker after a certain period of time. (only models equipped with an OLED panel)
The message [Panel refresh did not finish] is displayed. (only models equipped with an OLED panel)
You are concerned about an image retention. (only models equipped with an OLED panel)
A white line appears on the screen. (only models equipped with an OLED panel)

---

[118] OLED panel (only models equipped with an OLED panel) | OLED panel (only models equipped with an OLED panel) | OLED panel (only models equipped with an OLED panel)

The screen becomes darker after a certain period of time. (only models equipped with an OLED panel)

- If the whole image or part of the image remains still, the screen will gradually become darker to reduce image retention. This is a feature to protect the panel, and is not a malfunction.

---

[119] OLED panel (only models equipped with an OLED panel) | OLED panel (only models equipped with an OLED panel) | OLED panel (only models equipped with an OLED panel)

The message [Panel refresh did not finish] is displayed. (only models equipped with an OLED panel)

If the TV is turned on, the AC power cord (mains lead) is unplugged, or the ambient temperature falls outside of the range between 10°C and 40°C during the panel refresh, the process will not complete and this message will appear. Start the procedure again from the beginning.

Hint

- The panel refresh process takes about an hour to finish.

---

[120] OLED panel (only models equipped with an OLED panel) | OLED panel (only models equipped with an OLED panel) | OLED panel (only models equipped with an OLED panel)

You are concerned about an image retention. (only models equipped with an OLED panel)

If the same image is displayed repeatedly or for long periods of time, image retention may occur. This issue is not a malfunction.

The TV has two functions, [Pixel shift] and [Panel refresh], that are designed to reduce image retention.
You can perform a [Panel refresh] when necessary.

1. **Press the ⚙ (Quick Settings) button on the remote control, then select [Settings] — [Display & Sound] — [Expert panel settings] — [Panel refresh].**

Hint

- [Pixel shift] is a feature that helps prevents image retention by automatically moving the image at fixed intervals. Under normal circumstances, keep this option enabled.
- To reduce image retention, we recommend that you turn off the TV on a daily basis for more than four hours using the remote control or the power button on the TV.

Note

- Manually perform panel refresh only when image retention is particularly noticeable. Avoid performing it more than once a year because it may affect the usable life of the panel.
- Images that include clocks and bright colours easily cause image retention. Avoid displaying these types of images for long periods of time, otherwise image retention may occur.

---

[121] OLED panel (only models equipped with an OLED panel) | OLED panel (only models equipped with an OLED panel) | OLED panel (only models equipped with an OLED panel)

A white line appears on the screen. (only models equipped with an OLED panel)

- The panel refresh feature is running. A white line may be displayed on the screen during the panel refresh. This is not a malfunction of the TV.

Hint

- The panel refresh process takes about an hour to finish.
- A panel refresh can be performed when the room temperature is between 10°C and 40°C. If any of the following occurs during the panel refresh, the process will not finish and a message will be displayed.
  - The room temperature falls outside of this range.
  - The TV is turned on.
  - The power cord is disconnected.

  If the message is displayed, check the temperature of the room, etc.

---

[122] Troubleshooting

Keyboard

You cannot operate the current screen after the on-screen keyboard is displayed.

- To return to operation of the screen behind the on-screen keyboard, press the BACK button on the remote control.

---

[123] Troubleshooting

Broadcast reception

Check these things first to troubleshoot your TV reception.
Block noise or an error message appears and you cannot watch broadcasts.
Ghosting or double images appear.
Only snow noise or a black picture appears on the screen.
There is picture or sound noise when viewing an analogue TV channel.
Some channels are blank.
Poor reception or poor picture quality with digital broadcasts.
You cannot view digital channels.
Not all analogue channels are tuned.
You cannot view satellite channels.
Some digital channels are missing.
You want to tune your satellite dish.

---

[124] Broadcast reception | Broadcast reception

Check these things first to troubleshoot your TV reception.

- Make sure that the antenna (aerial) cable is firmly connected to the TV.
  - Make sure that the antenna (aerial) cable is not loose or disconnected.
  - Make sure that the cable or cable connector of antenna (aerial) is not damaged.
- Select terrestrial/cable service by pressing TV on the remote control, and then select [Digital] if the broadcasting service is not displayed. (Except when watching YouView)
- A terrestrial signal might be suppressed if there is a strong signal nearby.
  Disable the [LNA] (Except Single tuner models) setting in [Settings] — [Channels & Inputs] — [Channels] — [Channel setup] — [Advanced settings].
- After moving to a new house or trying to receive new services, select [Settings] — [Channels & Inputs] — [Channels] — [Channel setup] — [Auto tuning], and follow the on-screen instructions to reconfigure the necessary settings.
- To watch streaming content, connect the TV to the Internet.

Hint

- For more information, please visit the Sony support website.
  Support Site

Related topics

- Using Wi-Fi to connect the TV to the Internet/Network
- Connecting to a network using a LAN cable

[125] Broadcast reception | Broadcast reception

Block noise or an error message appears and you cannot watch broadcasts.

- Make sure that the antenna (aerial) cable is connected to the correct ports (at the TV/connected devices/wall).
- Make sure that the cable is not old or that the inside of the connector is not short-circuited.

[126] Broadcast reception | Broadcast reception

Ghosting or double images appear.

- Check cable or antenna (aerial) connections.
- Check the antenna (aerial) location and direction.
- Press the ⚙ (Quick Settings) button on the remote control, and select [Settings] — [Display & Sound] — [Picture] — [Motion] — [Motionflow] — [Off].

Related topics

- Distorted picture./The screen flickers.
- Check these things first to troubleshoot your TV reception.

---

[127] Broadcast reception | Broadcast reception

Only snow noise or a black picture appears on the screen.

- Check if auto tuning is performed.
- Check if the antenna (aerial) is broken or bent.
- Check if the antenna (aerial) has reached the end of its serviceable life (3-5 years for normal use, 1-2 years at a seaside location).

Related topics

- Check these things first to troubleshoot your TV reception.

---

[128] Broadcast reception | Broadcast reception

There is picture or sound noise when viewing an analogue TV channel.

- Check the [Analogue] setting.

  Press the ⚙ (Quick Settings) button on the remote control, then select [Settings] — [Channels & Inputs] — [Channels] — [Channel setup] — [Manual tuning] — [Analogue].

  - Perform [AFT] to obtain better picture and sound reception. (Option name differs depending on your region/country.)
  - Set [Audio filter] to [Off], [Low] or [High] to improve sound for analogue reception.
  - Disable [LNA] to improve picture reception. ([LNA] may not be available depending on your situation/region/country.)

- Make sure that the antenna (aerial) is connected using a high quality 75-ohm coaxial cable.
- Keep the antenna (aerial) cable away from other connecting cables.

Related topics

- Check these things first to troubleshoot your TV reception.

[129] Broadcast reception | Broadcast reception

Some channels are blank.

- The channel is for scrambled/subscription service only. Subscribe to a pay TV service.
- The channel is used only for data (no picture or sound).
- Contact the broadcaster for transmission details.

Related topics

- Check these things first to troubleshoot your TV reception.

[130] Broadcast reception | Broadcast reception

Poor reception or poor picture quality with digital broadcasts.

- Change the position, direction and angle of the terrestrial television antenna (aerial) to maximise the antenna (aerial) signal level. Make sure that the direction of the antenna (aerial) is not changed unintentionally (such as by wind).
- If you are using a TV signal booster, adjust its signal gain.
- If equipment (such as a TV signal distributor) is connected between the antenna (aerial) and the TV, it may affect the TV reception. Directly connect the antenna (aerial) and the TV to check if the reception is improved.
- Poor weather conditions can affect satellite broadcast systems. Wait for the weather to clear. (Satellite compatible models only)

Related topics

- Check these things first to troubleshoot your TV reception.

[131] Broadcast reception | Broadcast reception

You cannot view digital channels.

- Ask a local installer if digital transmissions are provided in your area.
- Upgrade to a higher gain antenna (aerial).

Related topics

- Check these things first to troubleshoot your TV reception.
- Some digital channels are missing.

[132] Broadcast reception | Broadcast reception

Not all analogue channels are tuned.

- Try to preset channels manually by configuring the settings. Press the ⚙ (Quick Settings) button on the remote control, then select [Settings] — [Channels & Inputs] — [Channels] — [Channel setup] — [Manual tuning] — [Analogue]. (Availability of [Analogue] and its options may vary depending on your region/country/situation.)

Related topics

- Some digital channels are missing.

[133] Broadcast reception | Broadcast reception

You cannot view satellite channels.

- Ask a local installer if satellite services are provided in your area.
- Check the satellite cable connection.
- When [No signal. LNB overload detected. Please turn off your TV and check the satellite connection.] message is displayed, unplug the mains lead. Then, ensure the satellite cable is not damaged and the satellite signal line is not short-circuited in the satellite connector.
- Check your LNB device and settings.
- If your TV has both “MAIN” and “SUB” jacks (sockets), and is not set to satellite twin tuner , the jack (socket) labelled “SUB” cannot be used. In this case, connect your satellite antenna (aerial) to the jack (socket) labelled “MAIN.”

Related topics

- You want to tune your satellite dish.

[134] Broadcast reception | Broadcast reception

Some digital channels are missing.

To change the tuning range (available depending on your region/country)

Press the ⚙ (Quick Settings) button on the remote control, then select [Settings] — [Channels & Inputs] — [Channels] — [Channel setup] — [Advanced settings] — [Tuning range].

[Normal]

Searches for available channels within your region/country.

[Extended]

Searches for available channels regardless of region/country.

To update digital services

You can run [Auto tuning] after moving to a new residence, changing service providers, or to search for newly launched channels.

Configuring automatic service updates

We recommend that [Auto service update] is enabled to allow new digital services to be added automatically as they become available.

1. **To enable [Auto service update], press the ⚙ (Quick Settings) button on the remote control, then select [Settings] — [Channels & Inputs] — [Channels] — [Channel setup] — [Advanced settings] — [Auto service update].**

If disabled, you will be notified of new digital services by an on-screen message and the services will not be automatically added.

Hint

- The availability of this function depends on your region/country. If unavailable, perform [Auto tuning] to add new services.

Related topics

- Check these things first to troubleshoot your TV reception.
- You cannot view digital channels.

[135] Broadcast reception | Broadcast reception

You want to tune your satellite dish.

If you have a satellite dish installed, you can view satellite broadcasts and determine your type of installation by configuring the tuning settings.

To tune your satellite

- Receiving satellite broadcasts

Related topics

- Check these things first to troubleshoot your TV reception.

[136] Troubleshooting

Sound

No sound but good picture.
Audio noise.
No audio or low audio with a home theatre system.
Distorted sound.
You want to output sound from the headphones/Bluetooth audio device and audio system/TV speakers at the same time.
You are concerned about a delay between the picture and sound.
No TV sounds such as operation sound or audio response.
You cannot establish an eARC connection.
You cannot use voice search with the built-in MIC (only TVs with a built-in MIC).
You can hear a slight noise from the TV speakers (only models with TV centre speaker mode).

[137] Sound | Sound

No sound but good picture.

- Check the antenna (aerial)/cable connection.
- Connect the TV to the AC power (mains), and press the power button on the TV or the remote control.
- Check the volume control.
- Press (Mute) or (Volume) + button to cancel muting.
- Press the (Quick Settings) button, then select [Speakers] — [TV speakers].
  Press the (Quick Settings) button on the remote control, then select [Settings] — [Display & Sound] — [Audio output] — [Speakers] — [TV speakers].
- If headphones or Bluetooth audio devices are connected, sound is not output from the TV speakers or audio system connected via eARC/ARC. Remove the headphones or disconnect the Bluetooth audio device.

Related topics

- No audio or low audio with a home theatre system.

[138] Sound | Sound

Audio noise.

- Make sure that the antenna (aerial) is connected using a high quality 75-ohm coaxial cable.
- Keep the antenna (aerial) cable away from other connecting cables.
- To avoid TV interference, make sure to use an undamaged antenna (aerial) cable.

Related topics

- Distorted sound.

[139] Sound | Sound

No audio or low audio with a home theatre system.

- Press the (Quick Settings) button on the remote control, then select [Settings] — [Display & Sound] — [Audio output] — [Speakers] — [Audio system].
- If the audio system is not compatible with Dolby Digital or DTS, set [Settings] — [Display & Sound] — [Audio output] — [Digital audio out] to [PCM].

- If you select an analogue (RF) channel and pictures are not displayed correctly, you will need to change the TV broadcast system. Press the ⚙ (Quick Settings) button on the remote control, then select [Settings] — [Channels & Inputs] — [Channels] — [Channel setup] — [Manual tuning] — [Analogue] — [TV system]. (Availability of [Analogue] or option name differs depending on the region/country/situation.)
- Check if the [Digital audio out volume] setting of the TV is at maximum.

  Press the ⚙ (Quick Settings) button on the remote control, then select:
  [Settings] — [Display & Sound] — [Audio output] — [Digital audio out volume]

- When using HDMI input with Super Audio CD or DVD-Audio, DIGITAL AUDIO OUT (OPTICAL) may not provide an audio signal.

Related topics

- Audio noise.
- Connecting an audio system

---

[140] Sound | Sound

Distorted sound.

- Check the antenna (aerial)/cable connection.
- Keep the antenna (aerial)/cable away from other connecting cables.
- Keep the TV away from electrical noise sources such as cars, hair-dryers, Wi-Fi units, mobile phones, or optical devices.
- When installing an optional device, leave some space between the device and TV.
- Perform [AFT] in [Manual tuning] — [Analogue] to improve sound for analogue reception.
  (Availability of [Analogue] and its options may vary depending on the region/country/situation.)
- Set [Audio filter] to [Low] or [High] to improve sound for analogue reception. ([Audio filter] may not be available depending on your region/country.)

Related topics

- Audio noise.

---

[141] Sound | Sound

You want to output sound from the headphones/Bluetooth audio device and audio system/TV speakers at the same time.

To output sound from both the headphones/Bluetooth audio device and TV speakers

The TV cannot output sound from both the headphones or Bluetooth audio device and the TV speakers at the same time.

To output sound from both an audio system connected via eARC/ARC and TV speakers

Sound can be output from both an audio system connected to the TV and the TV speakers at the same time by satisfying the following conditions.

- Connecting the TV and audio system using a digital optical cable
- Setting [Digital audio out] to [PCM]

For details about digital optical cable connections, refer to the Connecting an audio system page.

[142] Sound | Sound

You are concerned about a delay between the picture and sound.

If a Bluetooth audio device is connected

The picture and sound do not match because the sound is delayed due to the properties of Bluetooth. You can adjust the output timing of the picture and sound with the A/V sync setting.

1. **Set [A/V sync] to [Auto] or [On]. Press the ⚙ (Quick Settings) button on the remote control, then select [Settings] — [Display & Sound] — [Audio output] — [A/V sync].**

If a specific audio system is connected with an HDMI cable

You can adjust the output timing of the picture and sound. For details about supported models, refer to the support site.

- Support Site

Related topics

- Adjusting the AV sync setting
- Adjusting an audio system

[143] Sound | Sound

No TV sounds such as operation sound or audio response.

If the TV is connected via eARC or [Pass through mode] is set to [Auto], TV sounds such as those from remote control operation or voice responses are not output because audio signals from the HDMI input are passed through to the eARC audio system. To output those sounds from the TV, try the following.

- Stop watching the HDMI input device.
- Set [eARC mode] to [Off].
  Press the ⚙ (Quick Settings) button on the remote control, then select [Settings] — [Display & Sound] — [Audio output] — [eARC mode] — [Off].
- Set [Pass through mode] to [Off].
  Press the ⚙ (Quick Settings) button on the remote control, then select [Settings] — [Display & Sound] — [Audio output] — [Pass through mode] — [Off].

[144] Sound | Sound

You cannot establish an eARC connection.

- [eARC mode] does not work when the text-to-speech function for on-screen text within the TV's accessibility features is enabled.
- Connect the audio system to an HDMI cable with Ethernet.
- Connect the audio system to the TV's HDMI input terminal bearing the text "ARC" or "eARC/ARC".
- Configure the settings as follows.
  [Settings] — [Display & Sound] — [Audio output] — [eARC mode] — [Auto]
  [Settings] — [Display & Sound] — [Audio output] — [Speakers] — [Audio system]

- Enable the audio system's eARC feature.

Related topics

- Connecting an audio system

---

[145] Sound | Sound

You cannot use voice search with the built-in MIC (only TVs with a built-in MIC).

Check if the Built-in MIC Switch is on. The voice recognition performance of the built-in MIC may also degrade in the following cases.

- When eARC features are enabled
- When a sound bar is connected
- When [Pass through mode] is set to [Auto]

---

[146] Sound | Sound

You can hear a slight noise from the TV speakers (only models with TV centre speaker mode).

Models with TV centre speaker mode have a CENTER SPEAKER IN terminal in the back.

If an AV receiver is not connected to the CENTER SPEAKER IN terminal on the TV, you may hear a slight noise from the TV speakers when [Speakers] is set to [Audio system].

If you are concerned about the noise, disable the following setting:

Press the ⚙ (Quick Settings) button on the remote control, then select:
[Settings] — [TV centre speaker mode] in [Display & Sound] — [Audio output].

---

[147] Troubleshooting

Network (Internet/home)/apps

The TV cannot connect to the Internet/Network.
The picture and/or sound quality from streaming apps is poor.
Your TV cannot connect to the server.
You can connect to the Internet, but not to certain apps and services.

[148] Network (Internet/home)/apps | Network (Internet/home)/apps

The TV cannot connect to the Internet/Network.

If the wireless network does not connect or disconnects, try the following.

- Press the ⚙ (Quick Settings) button on the remote control and check that the following setting is enabled.
  [Settings] — [Network & Internet] — [Wi-Fi]
- Check the installation location of the TV and wireless router. Signal condition may be affected by the following:
  - Other wireless devices, microwaves, fluorescent lights, etc., are placed nearby.
  - There are floors or walls between the wireless router and TV.
- Turn the wireless router off and then on again.
- If the network name (SSID) of the wireless router to which you want to connect is not displayed, select [Add new network] to enter a network name (SSID).

If the problem is not resolved even after the procedures above or if you cannot connect even with a wired network, check the status of the network connection.

Checking the status of the network connection

1. **Press the ⚙ (Quick Settings) button on the remote control, then select [Settings] — [Network & Internet] — [Network status] — [Check Connection].**
   Check your network connections and/or server's instruction manual for connection information, or contact the person who set up the network (network administrator).

Hint

- The solution varies depending on the network status check. For solutions based on each issue, see "Frequently Asked Questions" on the Sony Support Site.

Note

- If the LAN cable is connected to an active server and the TV has acquired an IP address, check your server's connections and configurations.

  Press the ⚙ (Quick Settings) button on the remote control, then select [Settings] — [Network & Internet] — [Network status].

Related topics

- Using Wi-Fi to connect the TV to the Internet/Network
- Connecting to a network using a LAN cable

[149] Network (Internet/home)/apps | Network (Internet/home)/apps

The picture and/or sound quality from streaming apps is poor.

- Quality depends on the original video provided by the video content provider and your connection bandwidth.
- To enjoy watching Internet streaming videos, a network with a fast and stable line speed is necessary. In general, speeds that resemble the following are necessary:
  - Streaming standard definition (SD) Internet video: 2.5 Mbps
  - Streaming high definition (HD) Internet video: 10 Mbps
  - Streaming Ultra HD (4K) Internet video: 25 Mbps
- The wireless network connection quality varies depending on the distance or obstacles (e.g., wall) between the TV and the wireless router, environmental interference, and the quality of the wireless router. In this case, use a wired connection for the Internet, or try the 5GHz band.
- The 5GHz band may not be supported depending on your region/country. If the 5GHz band is not supported, the TV can only connect to a wireless router using the 2.4GHz band.
- When using a wireless network, keep wireless devices close together or avoid obstacles.
- Keep devices that emit RF interference (such as microwaves) away from the TV and wireless router, or turn off such devices.
- Audio is not output for videos without audio.

Hint

- For more information, please visit the Sony support website.
  Support Site

Related topics

- Connecting to a network using a LAN cable
- Using Wi-Fi to connect the TV to the Internet/Network

[150] Network (Internet/home)/apps | Network (Internet/home)/apps

Your TV cannot connect to the server.

- Check the LAN cable or wireless connection to your server and your TV.
- Check if your network is properly configured on your TV.
- Check your LAN cable/wireless connection or your server. The TV may have lost connection with the server.
- Perform [Server diagnostics] to check if your media server is communicating properly with the TV. Press the ⚙ (Quick Settings) button on the remote control, then select [Settings] — [Network & Internet] — [Home network setup] — [Server diagnostics].

Related topics

- Home network features
- The TV cannot connect to the Internet/Network.

[151] Network (Internet/home)/apps | Network (Internet/home)/apps

You can connect to the Internet, but not to certain apps and services.

- The date and time settings of this TV may be incorrect. Depending on certain apps and services, you may not be able to connect to those apps and services if the time is incorrect.
  If the time is incorrect, press the ⚙ (Quick Settings) button on the remote control, then select [Settings] — enable [Automatic date & time] in [System] — [Date and time].
- Check that the LAN cable and AC power cord (mains lead) of the router/modem* has been properly connected.
  * Your router/modem must first be setup to connect to the Internet. Contact your Internet service provider for router/modem settings.
- Try using apps later. The app content provider's server may be out of service.

Hint

- For more information, please visit the Sony support website.
  Support Site

Related topics

- Connecting to a network using a LAN cable
- Using Wi-Fi to connect the TV to the Internet/Network

[152] Troubleshooting

Remote control/accessories

The remote control does not operate.
You want to disable the remote control backlight. (only remote controls that feature backlight)

[153] Remote control/accessories | Remote control/accessories

The remote control does not operate.

Check if the TV is working properly

- Press the power button on the TV to determine if the problem is with the remote control or not. For the location of the power button, refer to the Reference Guide supplied with the TV.
- If the TV is not working, try resetting it.
  If a full reset (restart) of the TV is required

Check if the remote control is working properly

- Point the remote control at the remote control sensor located at the front of the TV.
- Keep the remote control sensor area clear from obstacles.
- Fluorescent light can interfere with remote control operation; try turning off any fluorescent light.
- Check that the orientation of each battery matches the positive (+) and negative (-) symbols in the battery compartment.
- Battery power may be low. Remove the remote control cover and replace the batteries with new ones.

- **Sliding type**

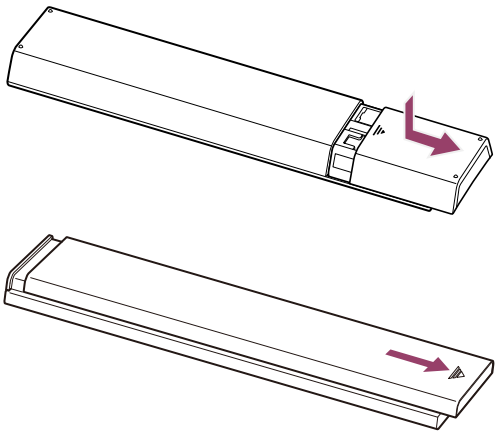

- **Push-release type**

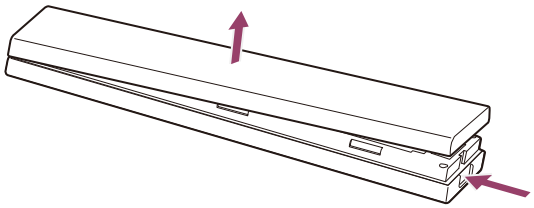

Note

- Remote controls with a MIC button are connected to the TV using Bluetooth. Radio interference may occur in the following situations and cause issues such as poor operation of microphone or remote control because Bluetooth radio waves use the same frequency as radio waves emitted from microwaves and wireless LANs (IEEE802.11b/g/n).
  - There are people or obstacles (such as metal objects or walls) between the TV and remote control.
  - A microwave is being used nearby
  - There is a wireless LAN access point nearby
  - The TV and remote control are unpaired

  In these cases, try the following solutions.
  - Use the remote control closer to the TV
  - Remove obstacles between the TV and remote control
  - Use the remote control when a microwave is not in use
  - Turn off other Bluetooth devices
  - Check the TV's Bluetooth setting and turn it on and off

    Press the ⚙ (Quick Settings) button on the remote control and select the following in order.

    If [Settings] — [Remotes & Accessories] — [Bluetooth] is disabled, enable it. If it is enabled, disable and then enable it again.
  - Set wireless LAN access points and microwaves at least 10 m away from the TV
  - If the 5 GHz band (IEEE802.11a) is available in the wireless LAN, connect to the 5 GHz band

- Depending on your model, a Bluetooth remote control is supplied and already paired with the TV. At the time of shipment, the supplied paired remote control cannot be used to operate other TVs. When checking remote control operation, use with the TV with which the remote control was supplied.

Reset the remote control

If the remote control does not operate correctly due to poor battery contact or static electricity, the problem may be resolved by resetting the remote control.

1. **Remove the batteries from the remote control.**
2. **Press the power button on the remote control for three seconds.**
3. **Install new batteries into the remote control.**

If the problem persists, refer to If a full reset (restart) of the TV is required and Frequently Asked Questions for Troubleshooting pages.

Note

- When you unplug the TV and plug it in again, the TV may not be able to turn on for a while, even if you press the power button on the remote control or the TV. This is because it takes time to initialise the system. Wait for about 10 to 20 seconds, then try again.

Related topics

- Using the remote control microphone

---

[154] Remote control/accessories | Remote control/accessories

You want to disable the remote control backlight. (only remote controls that feature backlight)

You can turn off the remote control backlight.

1. **Press and hold the ◿(Volume) - button and HOME button on the remote control at the same time for 2 seconds.**
   Release when the MIC LED on the remote control lights up twice.
   To enable the remote control backlight again, perform the procedure above.

[155] Troubleshooting

Power

The TV cannot be turned off using the remote control.
The TV turns off automatically.
The TV turns on automatically.
After turning on the TV, it turns off immediately. (only models equipped with an OLED panel)
The TV does not turn on.

[156] Power | Power

The TV cannot be turned off using the remote control.

The batteries in the remote control may be depleted. Replace them with new ones or turn off the TV using the power button on the TV.
You can press and hold the power button on the TV to turn it off.

Note

- The location of the power button on the TV varies depending on your model/country/region. For the location of the button, refer to the Reference Guide (booklet) included with the TV.
  Example of model with the power button under the LED

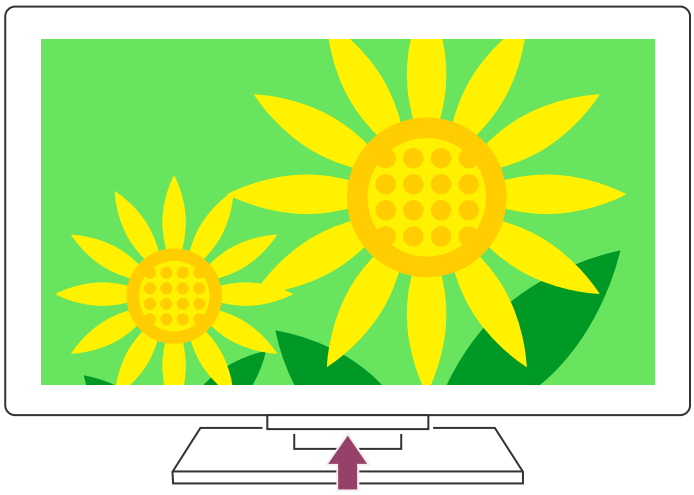

Hint

- For TV models with 1 button on the TV (power button only), you can press the power button on the TV to display the operation menu and adjust the volume or change channels.
- When the battery level of the remote control is low, you will see a notification on the HOME menu.

Related topics

- The remote control does not operate.
- If a full reset (restart) of the TV is required
- Home menu
- Using the Quick Settings

[157] Power | Power

The TV turns off automatically.

- The screen may have been turned off due to [Sleep timer] settings.
- Check the [Duration] setting of [On timer].
- Check if [Idle TV power off] in [Power and energy] is activated.

Related topics

- Timers & Clock

[158] Power | Power

The TV turns on automatically.

- Check if the [On timer] is activated.
- Disable the [Auto TV on] setting in [BRAVIA Sync settings].

Related topics

- BRAVIA Sync-compatible devices
- Timers & Clock

[159] Power | Power

After turning on the TV, it turns off immediately. (only models equipped with an OLED panel)

In this case, the TV might be in picture reset mode. When picture reset mode is enabled, the TV turns off for about 10 minutes after it is turned on, and then turns on again to reduce image retention. This is not a malfunction of the TV.

Turn on the TV again using the remote control and disable picture reset mode.

- Press the ⚙ (Quick Settings) button on the remote control and select [Settings] — [System] — [Retail mode settings]. Disable [Picture reset mode].

[160] Power | Power

The TV does not turn on.

Perform the procedures in the order below until the problem is solved.

1. Check if the TV turns on with the remote control.

Point the remote control at the sensor on the front of the TV and press the power button on the remote control.
Check if the TV turns on.
If the TV does not turn on, try resetting (restarting) the TV.

- If a full reset (restart) of the TV is required

2. Check if the TV turns on with the power button on the TV.

Press the power button on the TV and check if the TV turns on.
For the location of the power button, refer to the Reference Guide.
If the TV turns on with this procedure, there may be a problem with the remote control.
Refer to the following topic.

- The remote control does not operate.

3. Unplug the AC power cord (mains lead).

Unplug the TV power cord (mains lead) from the electrical outlet. Then press the power button on the TV and wait for 2 minutes, and plug the power cord (mains lead) back into the electrical outlet.

Hint

- When you unplug the TV and plug it in again, the TV may not be able to turn on for a while, even if you press the power button on the remote control or TV. This is because it takes time to initialise the system. Wait for about 10 to 20 seconds, then try again.

Related topics

- The remote control does not operate.
- If a full reset (restart) of the TV is required

[161] Troubleshooting

Connected devices

No picture from a connected device.
You cannot select a connected device.
Certain programmes on digital sources display a loss of detail.
Photo images or folders take time to display.
You cannot find a connected BRAVIA Sync HDMI device.
You cannot turn off the TV box using the TV's remote control.
An external device (such as a TV box) cannot be controlled using the TV's remote control. (TV box control compatible models only)
Some media files in the USB device or server are not displayed.
Operation cuts out, or a device does not work.
Some paid content cannot be played.

[162] Connected devices | Connected devices

No picture from a connected device.

- Turn the connected device on.
- Check the cable connection between the device and TV.
- Press the (Input select) button to display the list of inputs, then select the desired input.
- Correctly insert the USB device.
- Make sure that the USB device has been properly formatted.
- Operation is not guaranteed for all USB devices. Also, operations differ depending on the USB device features or the video files being played.

- Change the HDMI signal format of the HDMI input that does not display a picture to standard format. Press the ⚙ (Quick Settings) button on the remote control, then select [Settings] — [Channels & Inputs] — [External inputs] — [HDMI signal format] — the HDMI input you want to set.

Related topics

- Using the TV with Other Devices

[163] Connected devices | Connected devices

You cannot select a connected device.

- Check the cable connection.

Related topics

- Using the TV with Other Devices

[164] Connected devices | Connected devices

Certain programmes on digital sources display a loss of detail.

- Less detail than usual or artifacts (small blocks, dots or pixelation) may appear on the screen, due to the digital compression of the source content used by certain digital broadcasts and DVDs. The degree of visible artifacts depends on the clarity and resolution of the TV.

[165] Connected devices | Connected devices

Photo images or folders take time to display.

- Depending on the image dimension, file size, and number of files in a folder, some photo images or folders take time to display.
- Each time a USB device is connected to the TV, it may take up to a couple of minutes for the photos to display.

Related topics

- No picture from a connected device.

[166] Connected devices | Connected devices

You cannot find a connected BRAVIA Sync HDMI device.

- Check that your device is BRAVIA Sync-compatible.
- Make sure that [Control for HDMI] is set up on the BRAVIA Sync-compatible device and [BRAVIA Sync settings] — [BRAVIA Sync control] is set up on the TV.

Related topics

- BRAVIA Sync-compatible devices

[167] Connected devices | Connected devices

You cannot turn off the TV box using the TV's remote control.

TV box control compatible models have [TV box setup] in [Settings] — [Channels & Inputs] — [External inputs].

[168] Connected devices | Connected devices

An external device (such as a TV box) cannot be controlled using the TV's remote control. (TV box control compatible models only)

TV box control compatible models have [TV box setup] in [Settings] — [Channels & Inputs] — [External inputs].

- Make sure that your TV supports the external device.
- If you press and hold a button on the remote control, the operation may not work. Instead, try pressing the button repeatedly.
- Depending on the external devices, some buttons may not work.

Related topics

- How to control the TV box using the TV remote control

[169] Connected devices | Connected devices

Some media files in the USB device or server are not displayed.

- Unsupported files may not be displayed.
- All the folders/files may not be displayed depending on the system status.

Related topics

- Supported files and formats

[170] Connected devices | Connected devices

Operation cuts out, or a device does not work.

- Check if the device is turned on.
- Replace the batteries of the device.
- Re-register the device.
- Bluetooth devices use the 2.4GHz band, therefore communication speed may deteriorate or cut out occasionally due to wireless LAN interference.
  If household electric appliances (e.g., microwaves or mobile devices) are placed nearby, radio wave interference is more likely to happen.
- The TV or device may not work on a metal rack due to wireless communication interference.
- For usable communication distances between the TV and other devices, refer to the instruction manuals of the devices.
- When multiple Bluetooth devices are connected to the TV, the quality of Bluetooth communication may deteriorate.

Related topics

- Bluetooth devices

[171] Connected devices | Connected devices

Some paid content cannot be played.

- The source device needs to meet HDCP (High-bandwidth Digital Content Protection) 2.0/2.1/2.2 standards.
  Some pay contents may not be displayed via a source device which does not meet HDCP 2.0/2.1/2.2 standards.

[172] Troubleshooting

USB HDD recording

You cannot use a USB HDD device.
The USB HDD device cannot be registered.
Recording cannot be performed./Recording failed.
Recorded content disappeared.
You want to delete recorded content, but the delete icon is not displayed.
The USB HDD device operates even though it is not turned on.

[173] USB HDD recording | USB HDD recording

You cannot use a USB HDD device.

- Check that the USB HDD device is:
  - connected properly.

    Check that it is connected to the blue USB port labelled as “HDD REC”.

  - turned on.
  - registered to the TV.

    To register the USB HDD device to the TV, press the (Quick Settings) button on the remote control, then select [Settings] — [Channels & Inputs] — [Recording device setup] — [HDD registration].

- Connecting the USB HDD device via a USB hub is not supported.
- Perform [HDD performance check] to check that the USB HDD’s specifications meet the requirements.
  Press the (Quick Settings) button on the remote control, then select [Settings] — [Channels & Inputs] — [Recording device setup] — [HDD performance check].

Related topics

- Information about using a USB HDD device for recording

[174] USB HDD recording | USB HDD recording

The USB HDD device cannot be registered.

- Check if the USB HDD device is connected to the USB port (blue) indicated as “HDD REC”.
- If the USB HDD device is properly connected to the blue USB port, register it for recording again because it is already registered as a device for purposes other than recording (such as storage).

Note

- If there are devices connected to the USB1 and USB2 ports (only models with three USB ports), temporarily remove them while registering the USB HDD.

1. **Press the ⚙ (Quick Settings) button on the remote control, then select [Settings] — [System] — [Storage].**
2. **From [Device storage], select the USB HDD device you want to register for recording.**
3. **Select [Delete and format as removable storage], and then select [Format].**
4. **Select [Register for recording].**
5. **Follow the on-screen instructions to register the USB HDD device to the TV.**

- Use [HDD performance check] to check if the USB HDD device specifications meet the requirements.

  To perform an [HDD performance check], press the ⚙ (Quick Settings) button on the remote control, and then select [Settings] — [Channels & Inputs] — [Recording device setup] — [HDD performance check].

[175] USB HDD recording | USB HDD recording

Recording cannot be performed./Recording failed.

- If the recording fails, the reason will be listed in [Recording error list]. Press the REC LIST button, then select [Recording error list] in [Timer list/Timer settings].
- Check the available space in the HDD. If very little space is left, delete unnecessary content.
- The following programmes cannot be recorded.
  - Copy-protected programmes
  - Analogue programmes
  - Programmes from external inputs (including programmes from a connected TV box)
  - Streaming content
- Timer recording may not be possible if the broadcasting time of the programmes is changed.

Related topics

- Information about using a USB HDD device for recording

---

[176] USB HDD recording | USB HDD recording

Recorded content disappeared.

- Recording cannot be performed if the AC power cord (mains lead) or connecting cables are disconnected while recording. Do not disconnect any cable while recording content. Otherwise, the content being recorded or all recorded content may be lost.

---

[177] USB HDD recording | USB HDD recording

You want to delete recorded content, but the delete icon is not displayed.

- If 🗑 (Delete icon) is not displayed for the recorded content, the recorded content is protected. You must disable protection before deleting the content.
  To disable protection of the content, select the content whose protection you want to disable, and then select 🔓 (Unprotect icon).

Related topics

- Watching/deleting recorded content

---

[178] USB HDD recording | USB HDD recording

The USB HDD device operates even though it is not turned on.

- The connected USB HDD may spin or the device's LED indicator may light up while the TV obtains EPG data during standby/networked standby mode.

[179] Troubleshooting

LED

You want to disable the LED so that it does not light up or blink.
The Operational response LED blinks in red.

[180] LED | LED

You want to disable the LED so that it does not light up or blink.

You can use the settings below to turn off the LED.

To turn off the Operational response LED (white LED)

Press the ⚙ (Quick Settings) button on the remote control, then select [Settings] — [System] — [LED indicator] — disable [Operational response].

To turn off the Operational response LED (amber LED)/voice function LED (amber LED) (only TVs with a built-in MIC)

To turn off the amber voice function LED when the Built-in MIC switch is turned off, or to turn off the amber operational response LED when the Built-in MIC switch is on, in [Settings] — [System] — [LED indicator], disable [Voice detection status].

Related topics

- How the LEDs light up

[181] LED | LED

The Operational response LED blinks in red.

Count how many times it flashes (interval time is three seconds).
Reboot the TV by disconnecting the AC power cord from the TV for two minutes, then turn on the TV.
If the problem persists, disconnect the AC power cord, and contact Sony Customer Support with the number of times the Operational response LED flashes.

[182]

Index/Other

Index
Using the Help Guide
Specifications
Support Site
Keeping the TV updated
Trademark information

[183] Index/Other

Index

TV programmes

- GUIDE
- Interactive broadcasts
- Satellite broadcasts
- Recording
- Channel setup
- Parental lock

Picture/display

- 4K pictures
- HOME menu
- Picture
- Date and time
- Language
- Expert panel settings
- Pixel shift
- Panel refresh

Sound/voice

- Voice search, using
- Sound

Remote control

- Voice search
- HOME
- Quick Settings
- Inputs
- SYNC MENU

Connections

- Bluetooth
- Chromecast
- BRAVIA Sync
- Internet

External devices

- USB storage devices, recording with
- Blu-ray/DVD players, connecting
- USB memory devices, etc.
- Computers
- Digital cameras, camcorders
- Audio systems

Apps

- YouTube™
- Netflix

File playback

- Computers
- Supported files and formats
- Digital cameras, camcorders

Other

- Restart
- Accessibility
- System software update

---

[184] Index/Other

Using the Help Guide

This Help Guide explains how to use this TV. You can also refer to the Setup Guide for descriptions about TV installation, and the Reference Guide for information such as specifications, and wall mounting of this TV.

Help Guide versions

There are two versions of the Help Guide: the built-in version and the online version. The online Help Guide includes the latest information.
The online Help Guide is automatically displayed when the TV is connected to the internet, otherwise the built-in Help Guide is displayed.

Note

- To use the latest features described in the Help Guide, you may need to update the TV's software. For details about software updates, see the Software updates page.
- The names of settings in the Help Guide may differ from those displayed on the TV depending on the TV's release date or your model/country/region.
- The images and illustrations used in the Help Guide may differ depending on your TV model.
- Design and specifications are subject to change without notice.
- The Help Guide contains descriptions common across all models/regions/countries. Some descriptions of features do not apply depending on your model/region/country.

Hint

- To see if your TV is equipped with one of the functions described in the Help Guide, refer to the Reference Guide or the Sony website.
- This Help Guide is written for all regions/countries. Some descriptions contained in this Help Guide do not apply to some regions and countries.

Related topics

- Connecting to a network using a LAN cable
- Using Wi-Fi to connect the TV to the Internet/Network

[185] Index/Other

Specifications

You can find the specification information on the Sony support website:
Please visit the product page of your TV and refer to Specifications. For more about the support website, see the Support Site page.

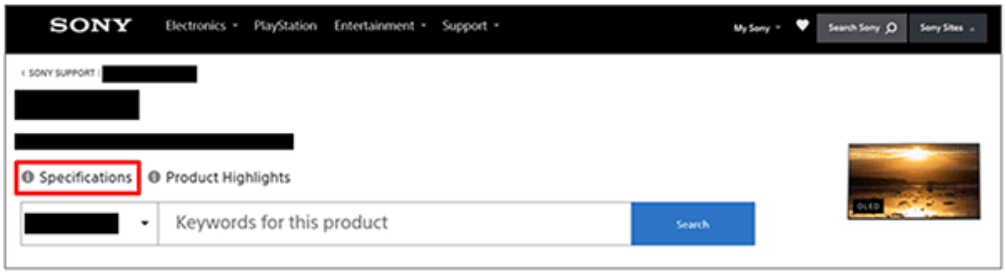

Note

- A Specifications page may not be available depending on your model. In such cases, please refer to the Reference Guide.

Related topics

- Computer video signal specifications

[186] Index/Other

Support Site

For the latest information and Online Help Guide, please visit the Sony support website:

http://www.sony.eu/support/

[187] Index/Other

Keeping the TV updated

The TV acquires data such as programme guides while it is in standby/networked standby mode. To keep your TV updated, we recommend that you turn off the TV normally by using the power button on the remote control or TV.

[188] Index/Other

Trademark information

- Vewd® Core. Copyright 1995-2021 Vewd Software AS. All rights reserved.

- The Bluetooth® word mark and logos are registered trademarks owned by the Bluetooth SIG, Inc. and any use of such marks by Sony Corporation is under license. Other trademarks and trade names are those of their respective owners.

- Wi-Fi®, Wi-Fi Alliance® and Wi-Fi Direct® are registered trademarks of Wi-Fi Alliance.
- The Wi-Fi CERTIFIED™ Logo is a certification mark of Wi-Fi Alliance.

- Disney+ and all marks and logos are trademarks of Disney Enterprises, Inc., used with permission.

- Amazon, Prime Video and all related logos are trademarks of Amazon.com, Inc. or its affiliates.

- “BRAVIA”, BRAVIA and BRAVIA Sync are trademarks or registered marks of Sony Corporation.

- All other trademarks are the property of their respective owners.