N 90, Built-in oven with steam function, 60 x 60 cm, Stainless steel

B47FS22N0

COOKING PASSION SINCE 1877

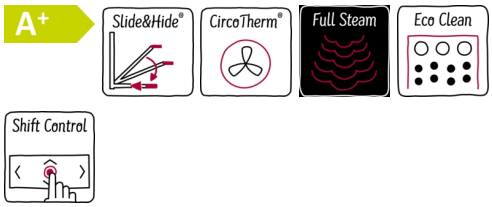

Built-in oven with FullSteam and SLIDE&HIDE® - combining all heating types and steam cooking in a single oven with unrestricted access

- √ Slide&Hide® – The fully disappearing oven door with rotating handle.
- √ CircoTherm® – Smart hot-air solution that lets you bake on up to four levels.
- √ Full Steam – Your oven is also a fully equipped steamer.
- √ Eco Clean with Easy Clean - the duo that makes oven cleaning easier
- √ Shift Control - fast navigation through menus and simple operation with the TFT display.

Optional accessories

Z11AB15A0	Baking tray, non-stick ceramic coated
Z11SZ00X0	SeamlessCombination mounting kit
Z11SZ80X0	SeamlessCombination 60 + 29cm
Z11SZ90X0	SeamlessCombination 60 + 45cm
Z12CB10A0	Baking tray, anthracite enamelled
Z12CM10A0	Moussaka pan, anthracite enamelled
Z13TC10X0	ComfortFlex Rail (1 level) f. steam
Z13TC16X0	ComfortFlex Rail (1level)&racks f. steam

Features

Technical Data

Color / Material Front : Stainless steel
Construction type : Built-in
Door opening : Drop down
Min. required niche size for installation (HxWxD) : 585-595 x 560-568 x 550 mm
Dimensions : 595 x 596 x 548 mm
Dimensions of the packed product (HxWxD) : 675 x 660 x 690 mm
Control Panel Material : Glass
Door Material : Glass
Net weight : 41.5 kg
Length of electrical supply cord : 120.0 cm
EAN code : 4242004181590
Fuse protection : 16 A
Voltage : 220-240 V
Frequency : 60; 50 Hz
Plug type : Gardy plug w/ earthing
Number of cavities (2010/30/EC) : 1
Usable volume (of cavity) - NEW (2010/30/EC) : 71 l
Energy efficiency rating : A+
Energy consumption per cycle conventional (2010/30/EC) : 0.87 kWh/cycle
Energy consumption per cycle forced air convection (2010/30/EC) : 0.69 kWh/cycle
Energy efficiency index (2010/30/EC) : 81.2 %
Included accessories : 1 x enamel baking tray, 1 x grid, 1 x universal pan, 1 x steam container, punched, size S, 1 x steam container, punched, size XL, 1 x steam container, unpunched, size S

4 242004 181590

N 90, Built-in oven with steam function, 60 x 60 cm, Stainless steel

B47FS22N0

COOKING PASSION SINCE 1877

Features

Features

- Combi-steam oven with 12 main functions heating methods: CircoTherm®, CircoTherm® Gentle, Top/bottom heat, Conventional heat Gentle, Circo-roasting, Full surface grill, Centre surface grill, CircoTherm® intensive, Bread baking, Bottom heat, Low temperature cooking, Keep warm
- Additional heating methods with steam: Steaming, Reheat with steam, Dough proving, Defrost
- Temperature range 40 °C - 250 °C
- Cavity volume: 71 litre

Level independent telescopic rails

- 4 shelf positions
- Available as an accessory

Design

- Illuminated Shift Control
- Cavity inner surface: enamel anthracite

Cleaning

- EcoClean Direct : back panel
- EasyClean
- Full glass inner door

Programmes/functions

- 4.1" TFT colour and graphics display with ShiftControl
- Electronic clock timer
- Temperature proposal
  Actual temperature display Heating up indicator automatic programmes:
- Number of automatic programmes: 38 PC
- Additional functions:
  De-scaling programme
  Drying function Automatic boiling point detection
- Slide&Hide® with fixed handle, SoftOpen
- Slide&Hide® with rotating handle
- Baking and roasting assistant, Automatic programmes
- Rapid heat
- LED light, On/off button
- 1 l Water tank capacity
- Water tank empty indicator
- Location of water tank: Outside cavity
- Cooling fan
- Stainless-steel fan

Accessories

- 1 x universal pan, 1 x enamel baking tray, 1 x grid, 1 x steam container, punched, size XL, 1 x steam container, punched, size S, 1 x steam container, unpunched, size S

Features

- Heat reflective glass
- Control panel lock
  Automatic safety switch off Residual heat indicator Start button
  Door contact switch

Technical information

- 120 cm Cable length
- Nominal voltage: 220 - 240 V
- Total connected load electric: 3.6 KW
- Energy efficiency rating (acc. EU Nr. 65/2014): A+
  Energy consumption per cycle in conventional mode:0.87 kWh
  Energy consumption per cycle in fan-forced convection mode:0.69 kWh
  Number of cavities: Main cavity Heat source: electrical Cavity volume:71 litre

Performance/technical information

- Appliance dimension (hxwxd): 595 mm x 596 mm x 548 mm
- Niche dimension (hxwxd): 585 mm - 595 mm x 560 mm - 568 mm x 550 mm
- Please refer to the dimensions provided in the installation manual
- We recommend you to choose complementary products within N90, in order to assure an optimal design combination of your Built-In appliances.

N 90, Built-in oven with steam function, 60 x 60 cm, Stainless steel

B47FS22N0

COOKING PASSION SINCE 1877

Dimensioned drawings

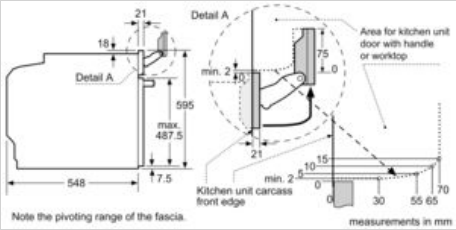

If the appliance will be installed underneath a hob, the following worktop thicknesses (including substructure if necessary) must be taken into account.
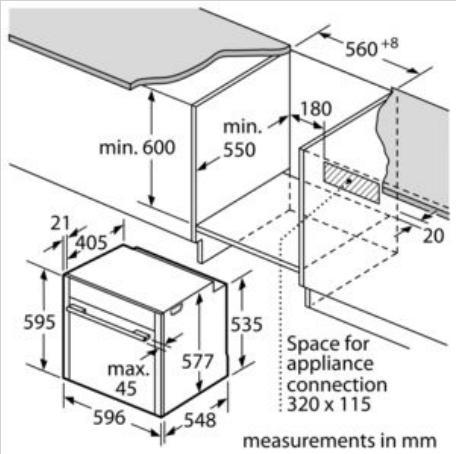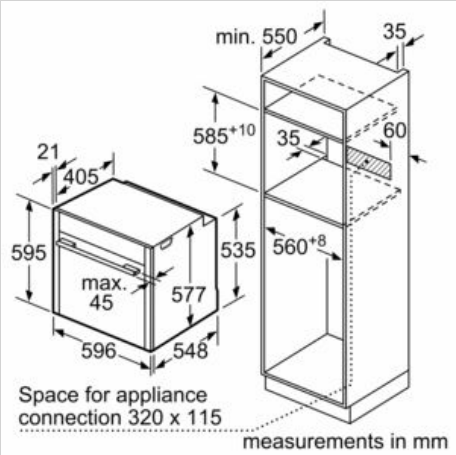
Hob type	min. worktop thickness	
	fitted	flush
Induction hob	37 mm	38 mm
Full surface Induction hob	47 mm	48 mm
Gas hob	30 mm	38 mm
Electric hob	27 mm	30 mm