SIEMENS

iQ700, Built-in oven with microwave function, 60 x 60 cm, Black
HM976GMB1B

Included accessories

2 x combination grid, 1 x universal pan

Optional accessories

HZ327000 Baking stone, HZ531010 Baking tray, non-stick ceramic coated, HZ532010 Universal pan, non-stick ceramic coated, HZ617000 Pizza pan, enamelled, HZ629070 Air Fry & Grill tray, HZ631070 Baking tray, enamelled, HZ632070 Multipurpose pan, enamelled, HZ633001 Lid for professional pan, enamelled, HZ633070 Professional pan, enamelled, HZ633073 Professional pan, enamelled, HZ634000 Baking and roasting grid (standard), HZ635000 AirFry & Grill Set, HZ636000 Glass pan, HZ664000 Baking and roasting grid (steam), HZ66X650 Cover Strip, HZ6BMA00 Assembly kit for vertical installation, HZ915003 Glass roasting dish, 5,4 L

The intelligent varioSpeed microwave oven with Oven Assistant with Voice Control for intuitive programme setting and activeClean for effortless oven cleaning.

- ✓ cookControl Pro: excellent results, whatever the recipe.
- ✓ Oven Assistant with Voice Control: intuitively select the right programme.
- ✓ activeClean®: the automatic, self-cleaning oven system.
- ✓ Home Connect with Remote Control: unlock the full potential of your smart oven.
- ✓ roastingSensor Plus: for perfectly prepared roasts.

Features

Technical Data

Additional functions: ..... Microwave combination oven
Control panel: ..... Electronic
Dimensions: ..... 595 x 594 x 548 mm
Cavity dimensions: ..... 357.0 x 480 x 392.0 mm
Length of electrical supply cord: ..... 120.0 cm
Weight: ..... 45.3 kg
Gross weight: ..... 48.5 kg
EAN code: 4242003902318
Max. microwave power: ..... 800 W
Connection Rating: ..... 3600 W
Fuse protection: ..... 16 A
Nominal power: ..... 220-240 V
Frequency: ..... 50; 60 Hz
Plug type: ..... no plug (electrical connection by electrician)
Included accessories: ..... 2 x combination grid, 1 x universal pan

4 242003 902318

SIEMENS

iQ700, Built-in oven with microwave function, 60 x 60 cm, Black
HM976GMB1B

Features

Features
- Oven with microwave with 19 heating methods: conventional top & bottom heating, full width grill, half width grill, coolStart, bottom heat, low temperature cooking, keep warm, plate warming, Conventional heat gentle, Microwave, 4D Hot air, Conventional heat, Full width grill, Half width grill, Hot air grilling
- Max. Power: 800 W; 5 Microwave power settings (90 W,180 W,360 W,600 W, boost) with Inverter (MW)
- Intelligent microwave inverter technology: For optimised results maximum output power will be regulated to 600 W when used in longer operation for gentler cooking.
- Temperature range 30 °C - 275 °C
- Cavity volume: 67 litres

Level independent telescopic rails
- 5 shelf positions in oven
- 1 level telescopic shelf, pyrolitic proof

Design
- Quadruple glazed door with heat reflective glass glazed CoolTouch door
- studioLine Black Steel Design
- Touch control
- studioLine Glass handle
- Cavity inner surface: enamel anthracite

Cleaning
- activeClean
- hydrolyse program

Programmes/functions
- Oven Assistant with Voice Control
- SE62
- Electronic oven clock timer
- Digital temperature display with proposal
- Actual temperature display Heating-up indicator Temperature probe
- Drop down oven door, softClose, softOpen
- cookControl Plus
- Fast preheat
- coolStart
- LED light, Light on/off when door opened/closed
- Integral cooling fan
- WLAN - Home connect enabled

Accessories
- 2 x combination grid, 1 x universal pan

Features
- Maximum door temperature 30 °C
- Electronic door lock
- Control panel lock Automatic safety switch off Residual heat indicator Start button Door contact switch

Technical information
- 120 cm Cable length
- Nominal voltage: 220 - 240 V
- Total connected load electric: 3.6 KW

Performance/technical information
- Appliance dimension (hxwxd): 595 mm x 594 mm x 548 mm
- Niche dimension (hxwxd): 585 mm - 595 mm x 560 mm - 568 mm x 550 mm
- Please refer to the dimensions provided in the installation manual

SIEMENS

iQ700, Built-in oven with microwave function, 60 x 60 cm, Black
HM976GMB1B

Dimensioned drawings

Measurements in mm

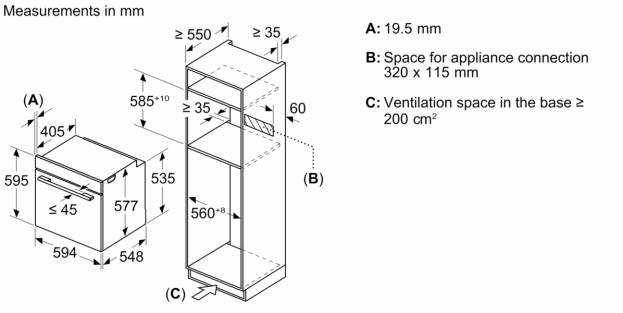

A: 19.5 mm

B: Space for appliance connection 320 x 115 mm

C: Ventilation space in the base ≥ 200 cm²

Installing two appliances on top of each other
Air exchange

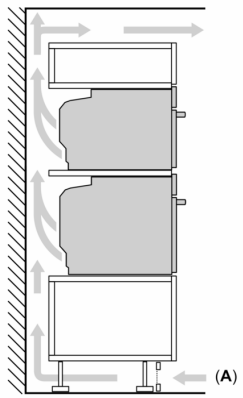

A: Air inlet ≥ 200 cm²

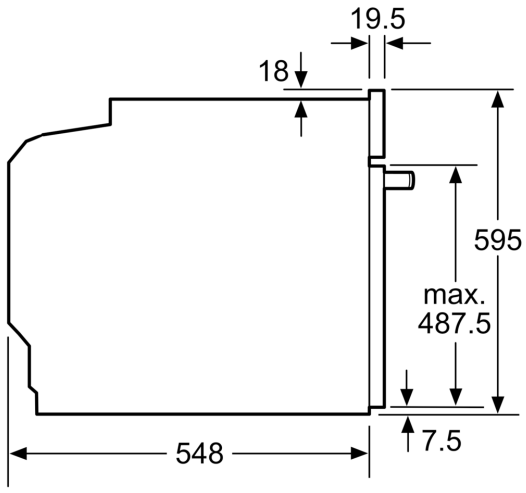

measurements in mm

If the appliance will be installed underneath a hob, the following worktop thicknesses (including substructure if necessary) must be taken into account.

Hob type	min. worktop thickness	
	fitted	flush
Induction hob	37 mm	38 mm
Full surface Induction hob	47 mm	48 mm
Gas hob	30 mm	38 mm
Electric hob	27 mm	30 mm

SIEMENS
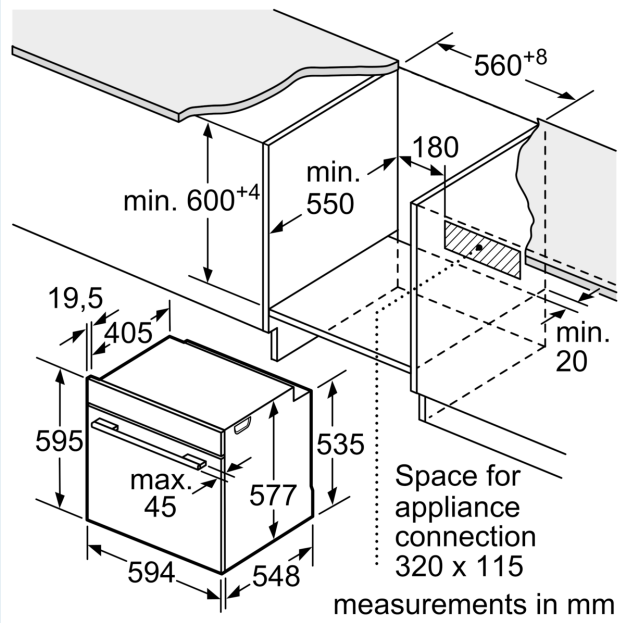
Dimensioned drawings